NOTES:
1. ADDITIONAL WIRING REQUIRED FOR INBOUND STORAGE TRACK SIGNALS.

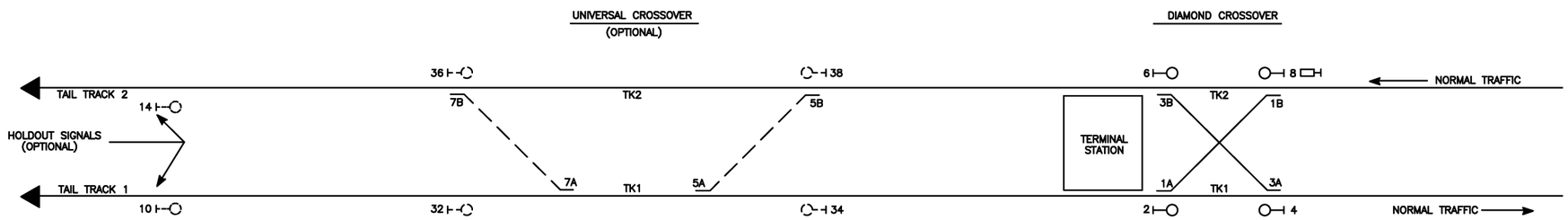

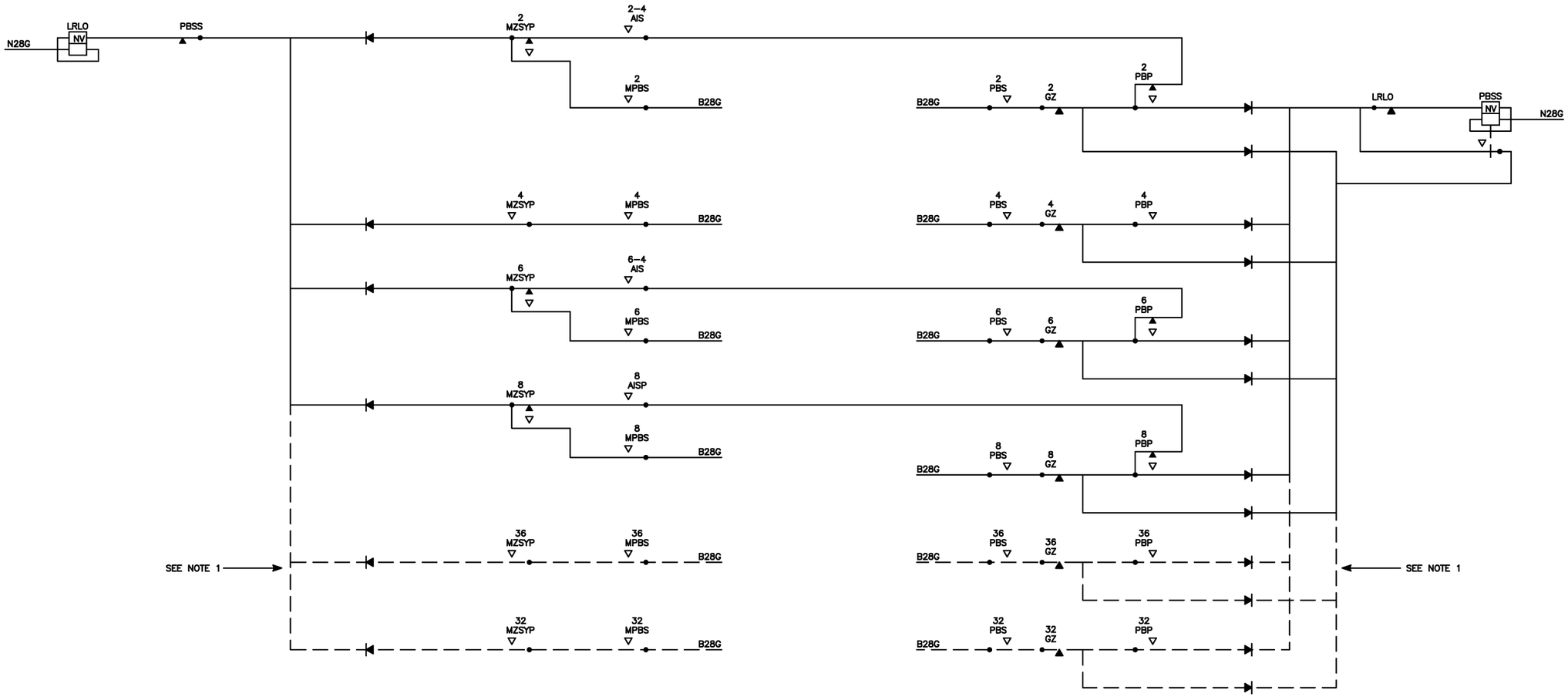

This Drawing Reflects a WMATA standard design approach. Project specific drawings must be developed by the Contractor which reflect this Design Philosophy

DESIGNED GAH 2–00 DATE	REFERENCE DRAWINGS	REVISIONS
DRAWN JMR 2–00 DATE	NUMBER / DESCRIPTION	DATE / BY / DESCRIPTION
CHECKED DATE		08/2001 SYSP Revised and issued by the Authority
APPROVED DATE		
UPDATED DATE		

WASHINGTON METROPOLITAN AREA TRANSIT AUTHORITY

DEPARTMENT OF TRANSIT SYSTEM DEVELOPMENT
OFFICE OF SYSTEMS

SUBMITTED DATE

APPROVED DIRECTOR May 3, 2001 DATE

TYPICAL LOCAL/REMOTE LOCKOUT CIRCUITS

SCALE: NONE

DRAWING NO.: ST–TC–I–077

NOTES:

1. AN ELECTRONIC FLASHER MAY BE USED. HOWEVER A VOLTAGE TOLERANCE OF NO MORE THAN 5 VOLTS TOTAL VARIATION SHALL BE MAINTAINED ON LIGHTS THAT ARE FLASHED.

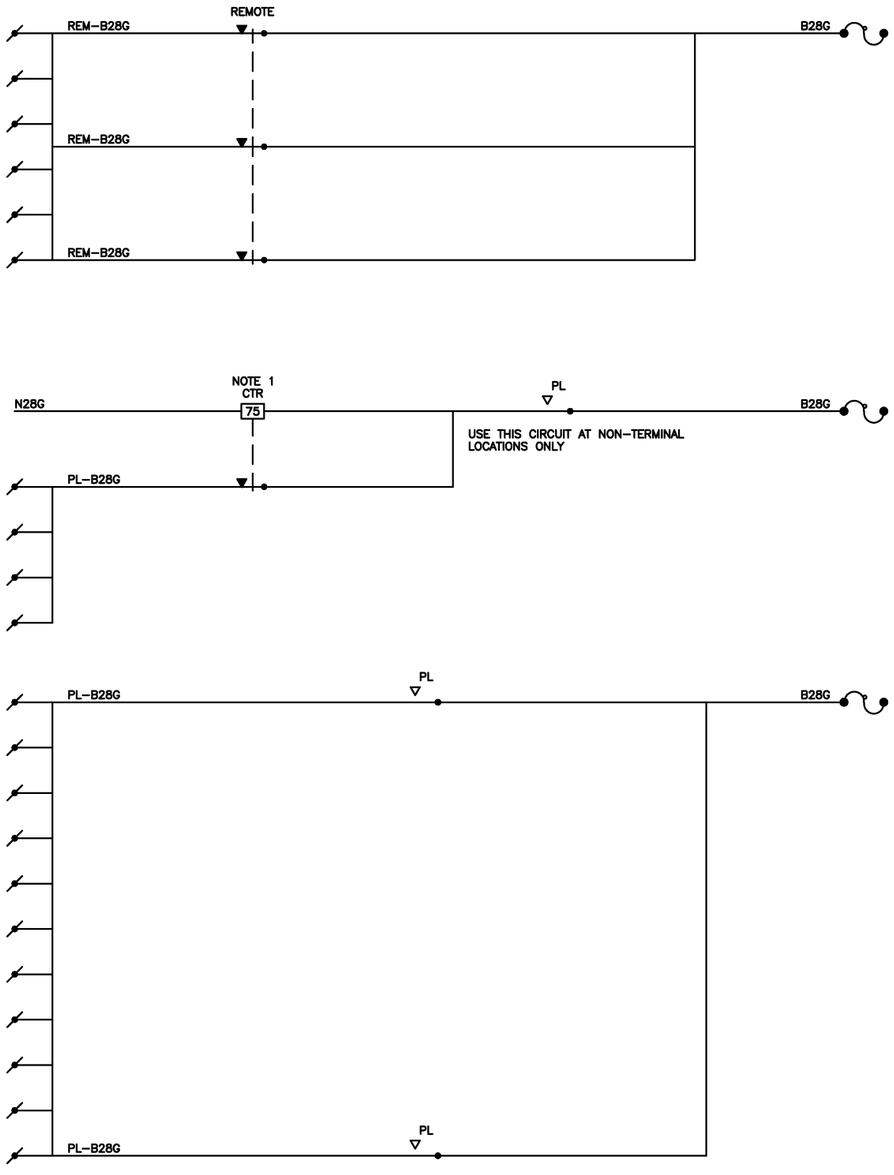

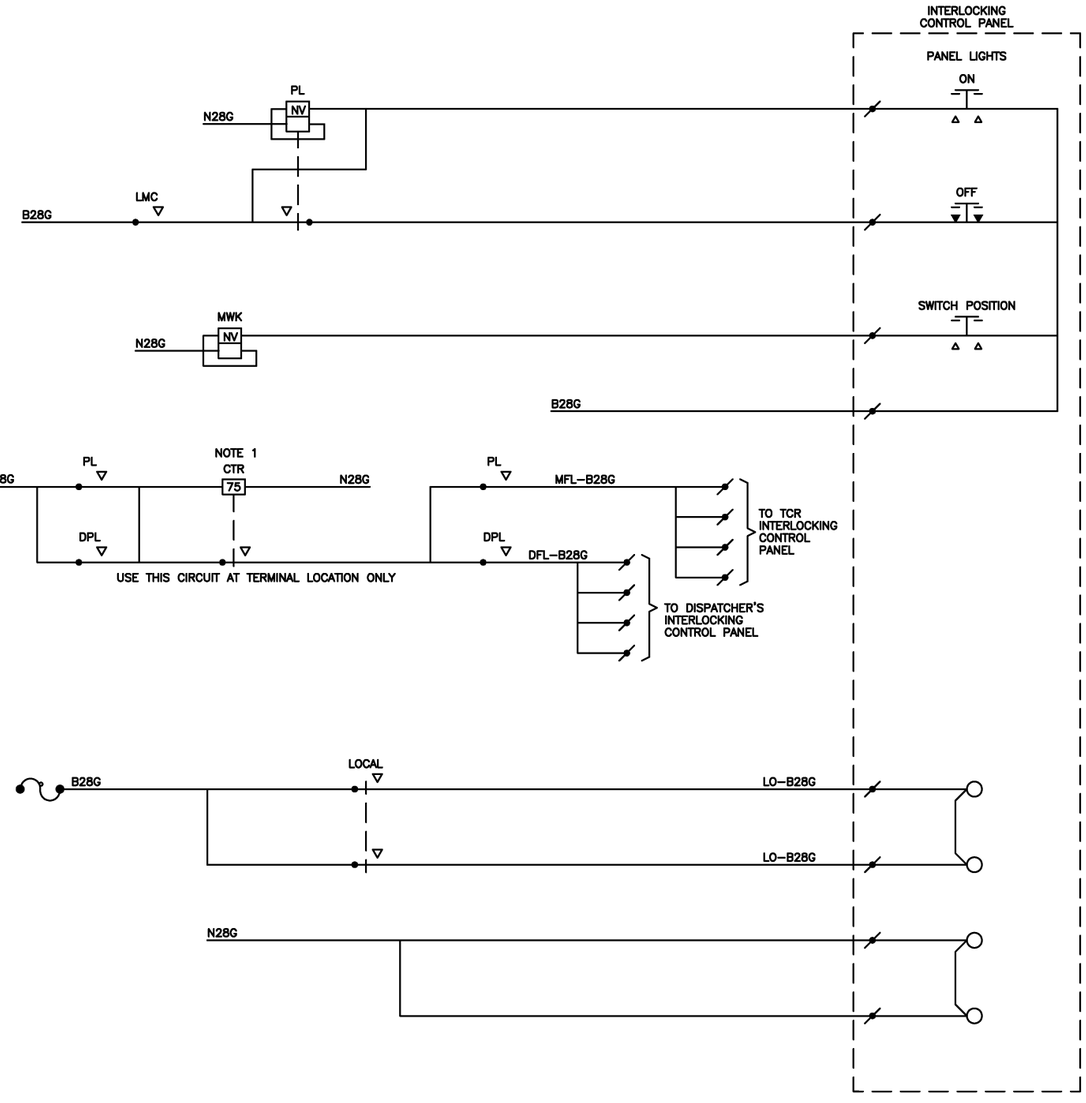

This Drawing Reflects a WMATA standard design approach. Project specific drawings must be developed by the Contractor which reflect this Design Philosophy

DESIGNED	GAH	2–00 DATE
DRAWN	JMR	2–00 DATE
CHECKED		DATE
APPROVED		DATE
UPDATED		DATE

REFERENCE DRAWINGS

NUMBER	DESCRIPTION

REVISIONS

DATE	BY	DESCRIPTION
08/2001	SYSP	Revised and issued by the Authority

WASHINGTON METROPOLITAN AREA TRANSIT AUTHORITY

DEPARTMENT OF TRANSIT SYSTEM DEVELOPMENT
OFFICE OF SYSTEMS

SUBMITTED _____ DATE

APPROVED _____ DIRECTOR May 3, 2001 DATE

TYPICAL LOCAL, REMOTE, PANEL & FLASHING B28G ENERGY DISTRIBUTION

SCALE: NONE

DRAWING NO.: ST–TC–I–079

UNIVERSAL CROSSOVER

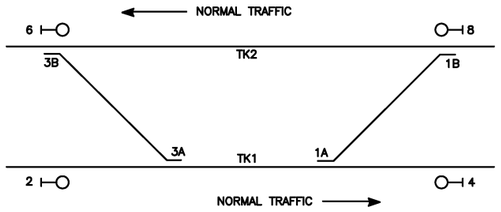

DIAMOND CROSSOVER

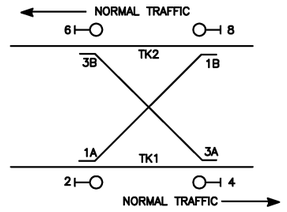

NOTES:

1. DWG. NO. CROSS REFERENCE SHALL BE SHOWN ON CONTRACTOR'S RTU CONTROL CIRCUIT DRAWINGS.

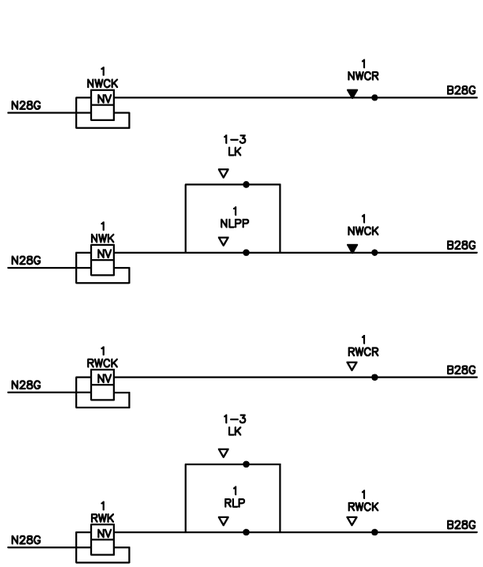

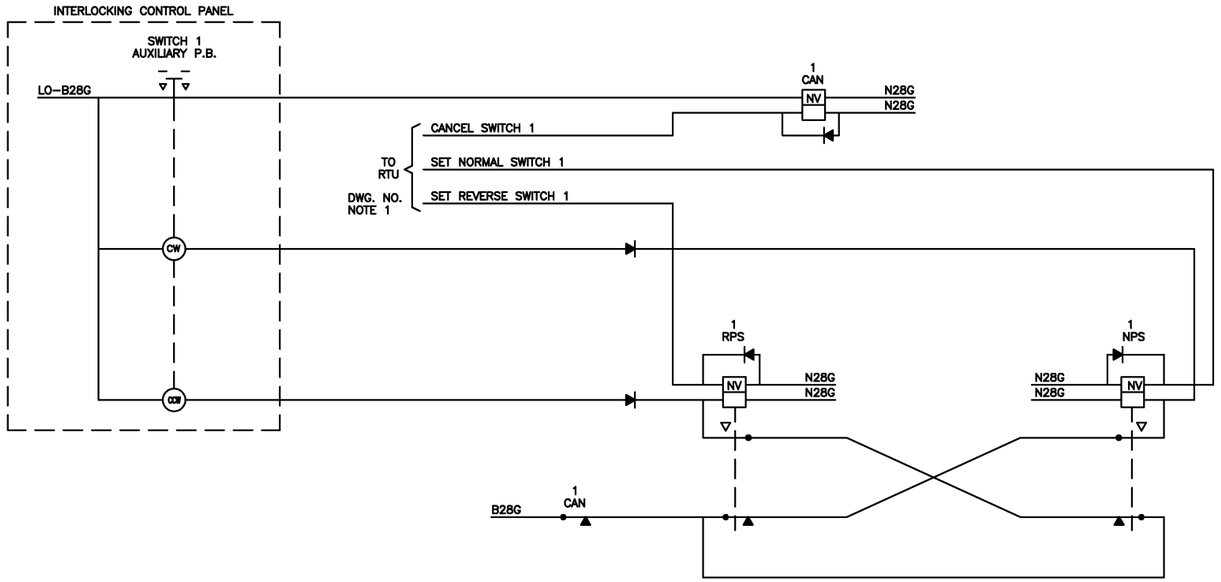

This Drawing Reflects a WMATA standard design approach. Project specific drawings must be developed by the Contractor which reflect this Design Philosophy

DESIGNED	GAH	2–00 DATE
DRAWN	JMR	2–00 DATE
CHECKED		DATE
APPROVED		DATE
UPDATED		DATE

REFERENCE DRAWINGS	
NUMBER	DESCRIPTION

REVISIONS		
DATE	BY	DESCRIPTION
08/2001	SYSP	Revised and issued by the Authority

WASHINGTON METROPOLITAN AREA TRANSIT AUTHORITY

DEPARTMENT OF TRANSIT SYSTEM DEVELOPMENT
OFFICE OF SYSTEMS

SUBMITTED _____ DATE

APPROVED _____ DIRECTOR May 3, 2001 DATE

TYPICAL AUXILIARY SWITCH PUSHBUTTON AND SWITCH POSITION INDICATION CIRCUITS

SCALE	DRAWING NO.
NONE	ST–TC–I–081

NOTES:

1. DWG. NO. CROSS REFERENCE SHALL BE SHOWN ON CONTRACTOR'S RTU CONTROL CIRCUIT DRAWINGS.

UNIVERSAL CROSSOVER

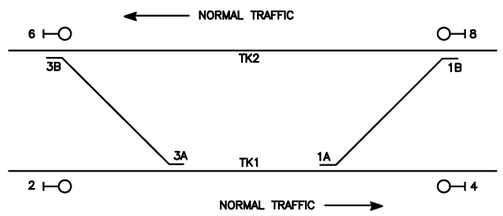

DIAMOND CROSSOVER

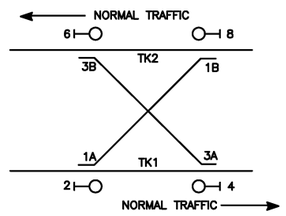

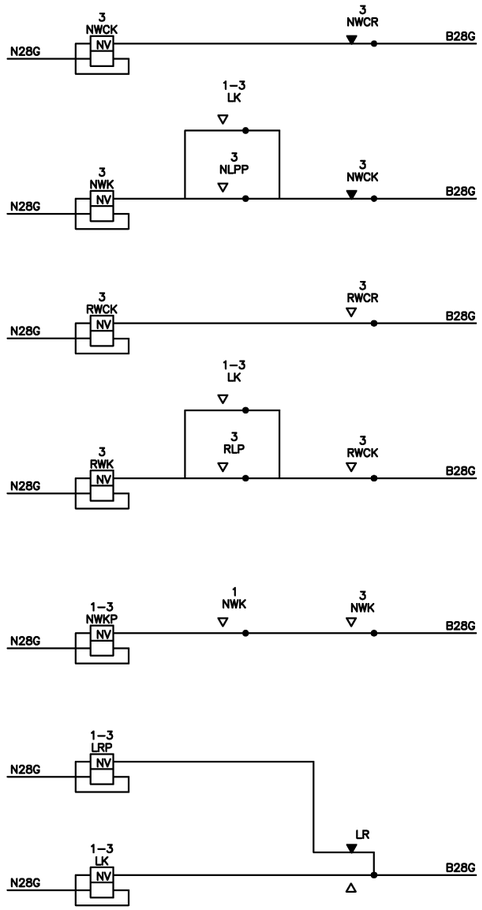

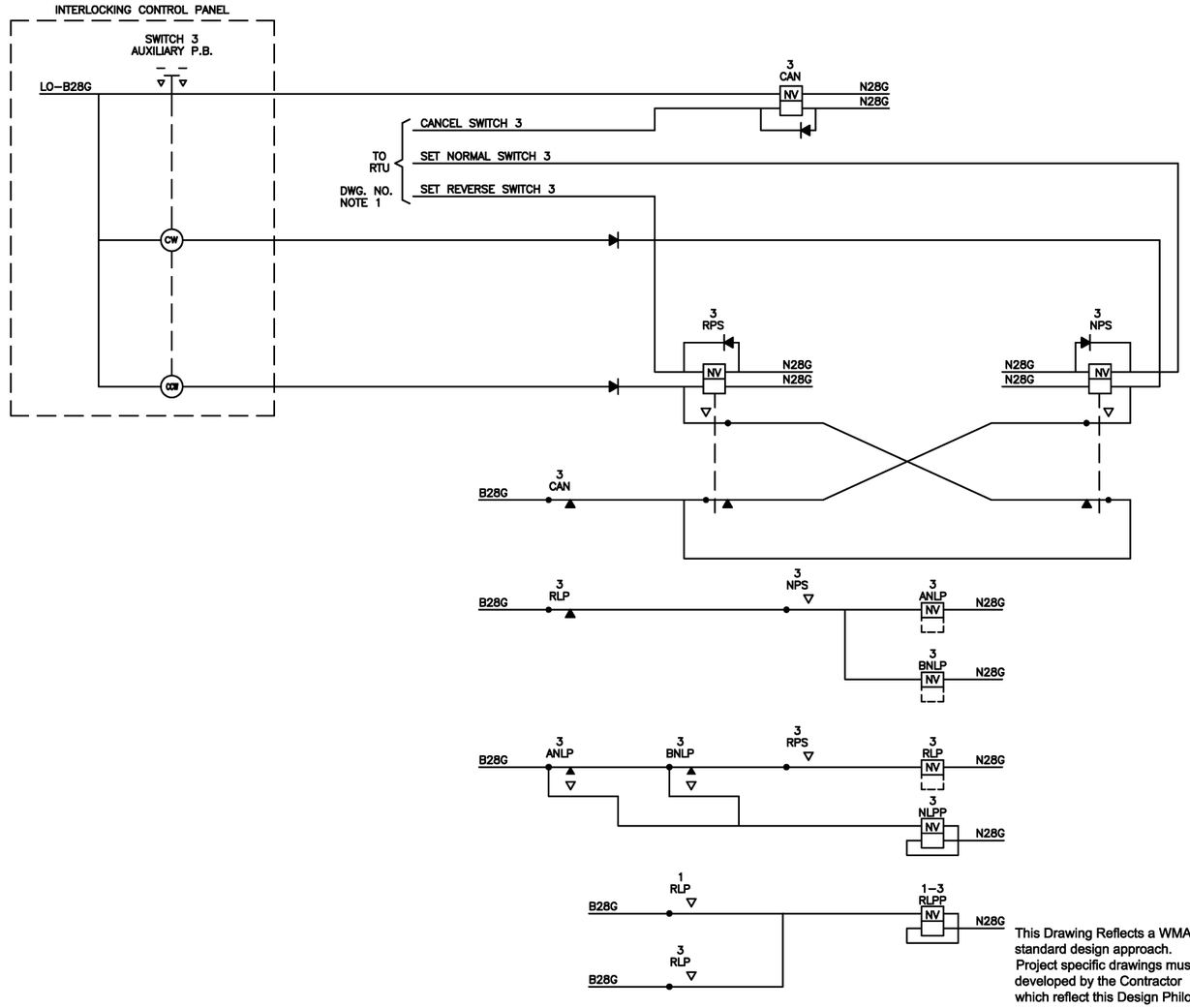

This Drawing Reflects a WMATA standard design approach. Project specific drawings must be developed by the Contractor which reflect this Design Philosophy

DESIGNED	GAH	2–00 DATE
DRAWN	JMR	2–00 DATE
CHECKED		DATE
APPROVED		DATE
UPDATED		DATE

REFERENCE DRAWINGS	
NUMBER	DESCRIPTION

REVISIONS		
DATE	BY	DESCRIPTION
08/2001	SYSP	Revised and issued by the Authority

WASHINGTON METROPOLITAN AREA TRANSIT AUTHORITY

DEPARTMENT OF TRANSIT SYSTEM DEVELOPMENT
OFFICE OF SYSTEMS

SUBMITTED _____ DATE

APPROVED _____ DIRECTOR May 3, 2001 DATE

TYPICAL AUXILIARY SWITCH PUSHBUTTON AND SWITCH POSITION INDICATION CIRCUITS
SWITCH 3

SCALE NONE

DRAWING NO. ST–TC–I–082

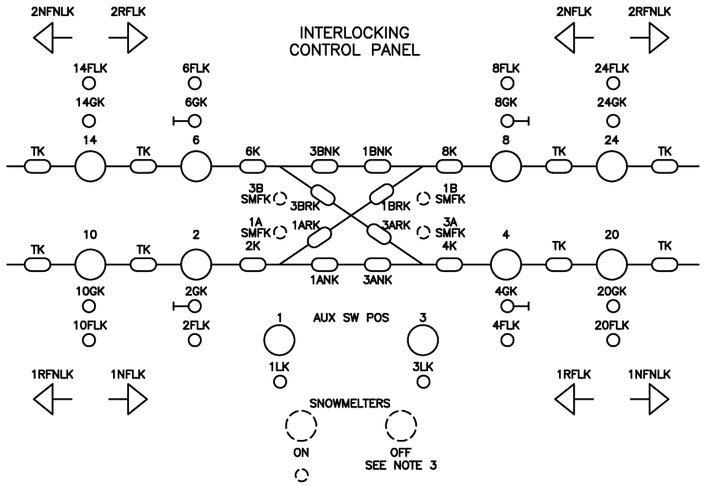

NOTES:

1. ADDITIONAL CIRCUITRY (NOT SHOWN) SHALL BE ADDED BY THE CONTRACTOR TO MEET THE "INDICATION TEST" REQUIREMENTS FOR EACH LED PANEL INDICATOR LIGHT. SEE ARTICLE 3.5.27, INTERLOCKING CONTROL PANELS.
2. TRACK CIRCUITS WHICH SHALL BE INDICATED ARE SHOWN ON THE ROUTE CHARTS.
3. WHERE APPLICABLE, ADDITIONAL INDICATORS AND CIRCUITS SHALL BE ADDED FOR SNOWMELTER FAILURE INDICATION. SEE DWG. P-007 AND SECTION 16969, SNOWMELTER LAYOUTS.

This Drawing Reflects a WMATA standard design approach. Project specific drawings must be developed by the Contractor which reflect this Design Philosophy

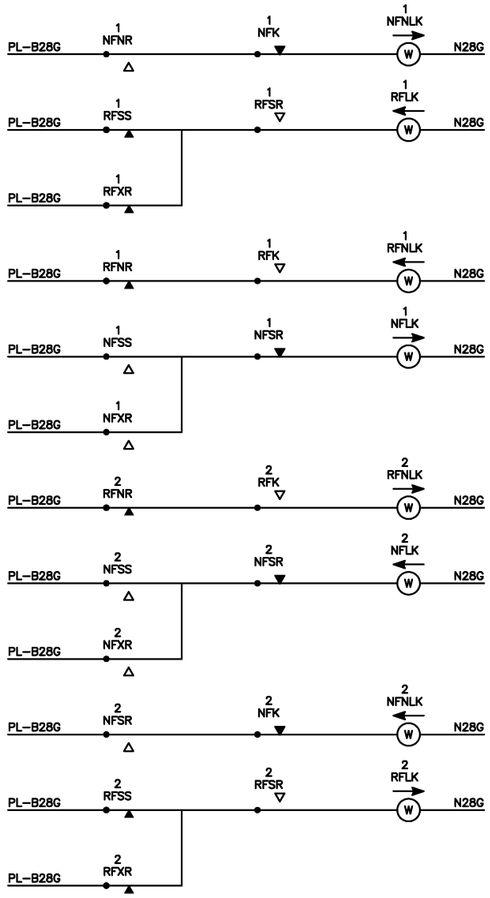

NOTE 2

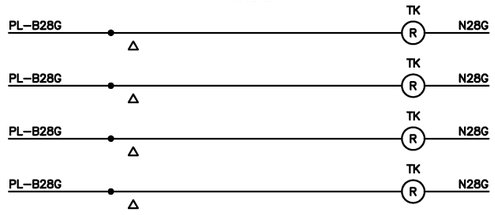

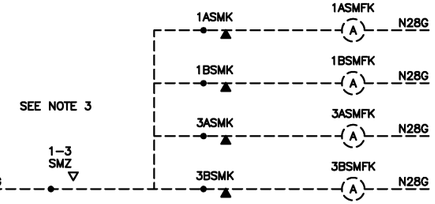

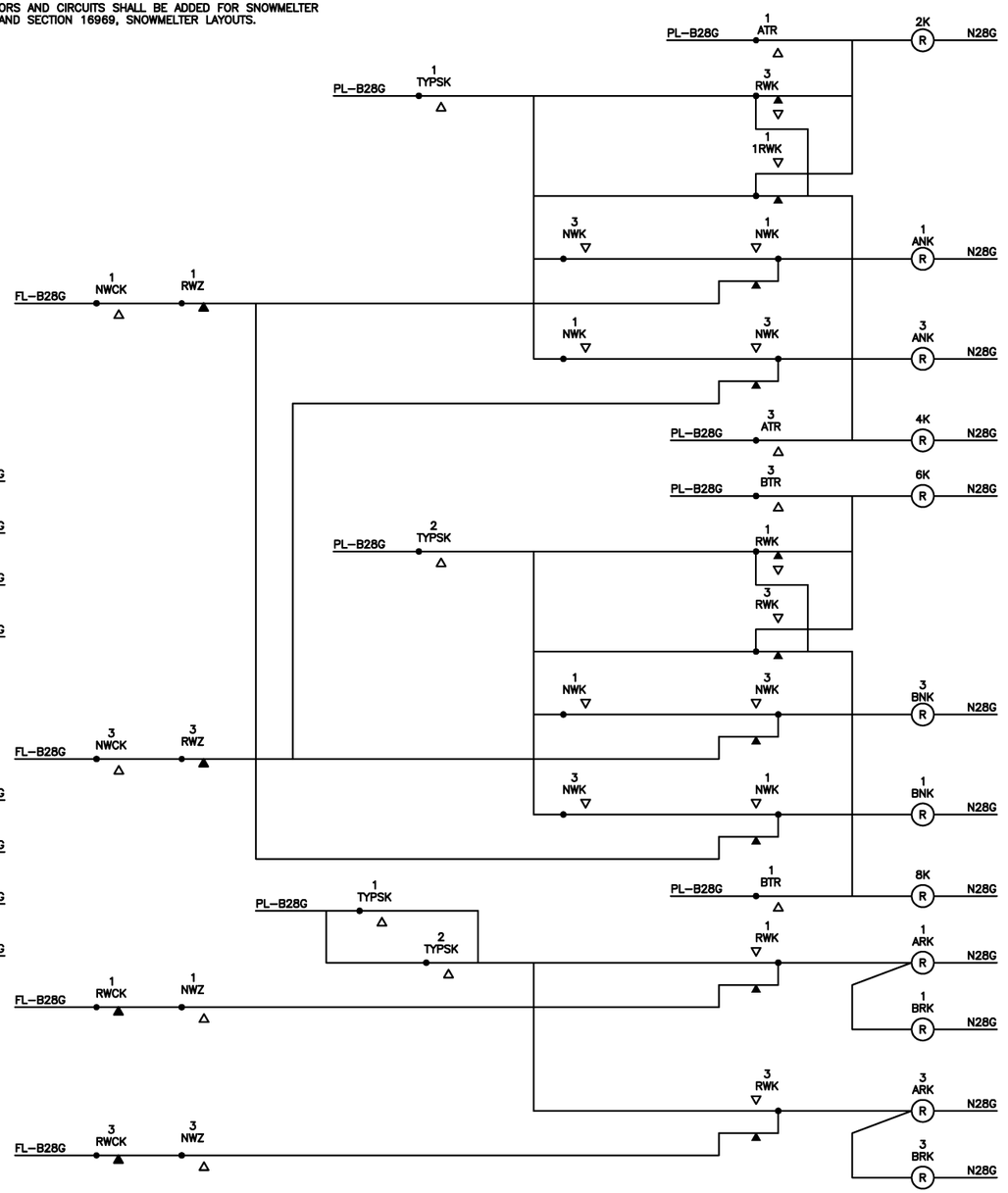

DESIGNED	GAH	2-00 DATE
DRAWN	JMR	2-00 DATE
CHECKED		DATE
APPROVED		DATE
UPDATED		DATE

REFERENCE DRAWINGS	
NUMBER	DESCRIPTION

REVISIONS		
DATE	BY	DESCRIPTION
08/2001	SYSP	Revised and issued by the Authority

WASHINGTON METROPOLITAN AREA TRANSIT AUTHORITY

DEPARTMENT OF TRANSIT SYSTEM DEVELOPMENT
OFFICE OF SYSTEMS

SUBMITTED _____ DATE

APPROVED DIRECTOR _____ May 3, 2001 DATE

TYPICAL INTERLOCKING CONTROL PANEL INDICATION CIRCUITS, TRACK OCCUPANCY AND TRAFFIC

SCALE: NONE

DRAWING NO.: ST-TC-I-085

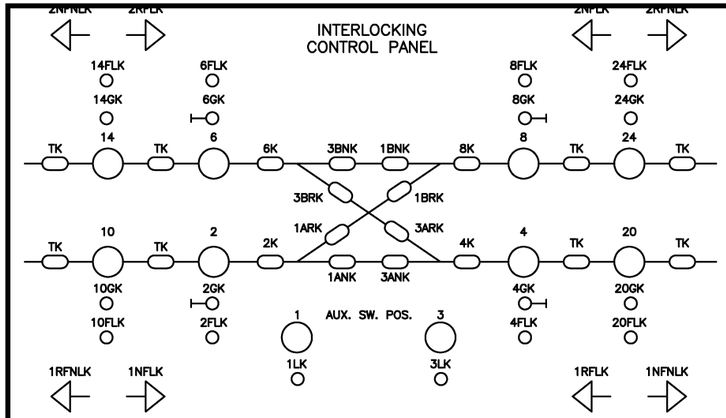

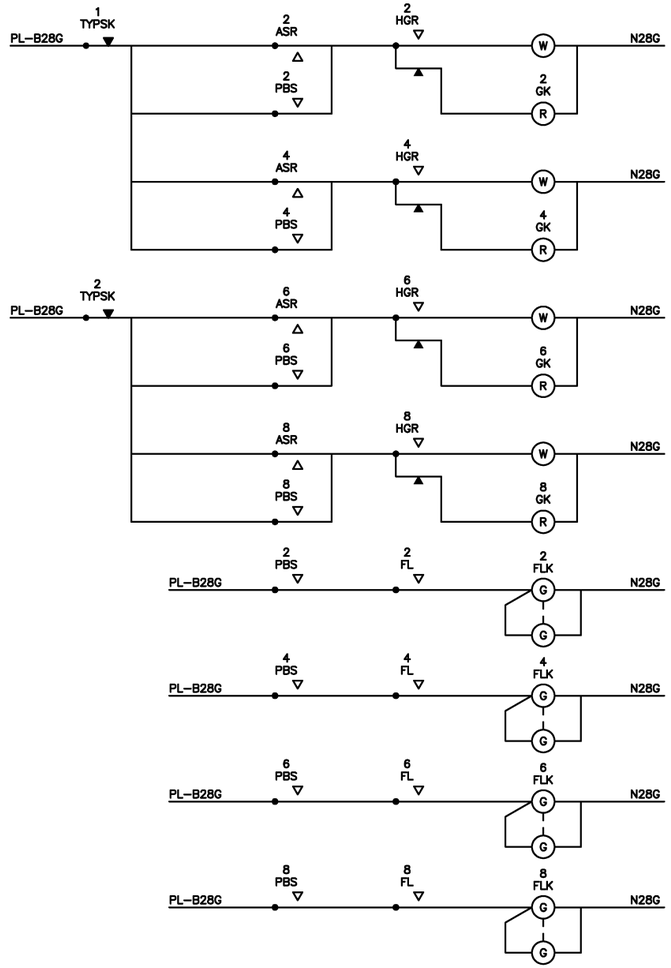

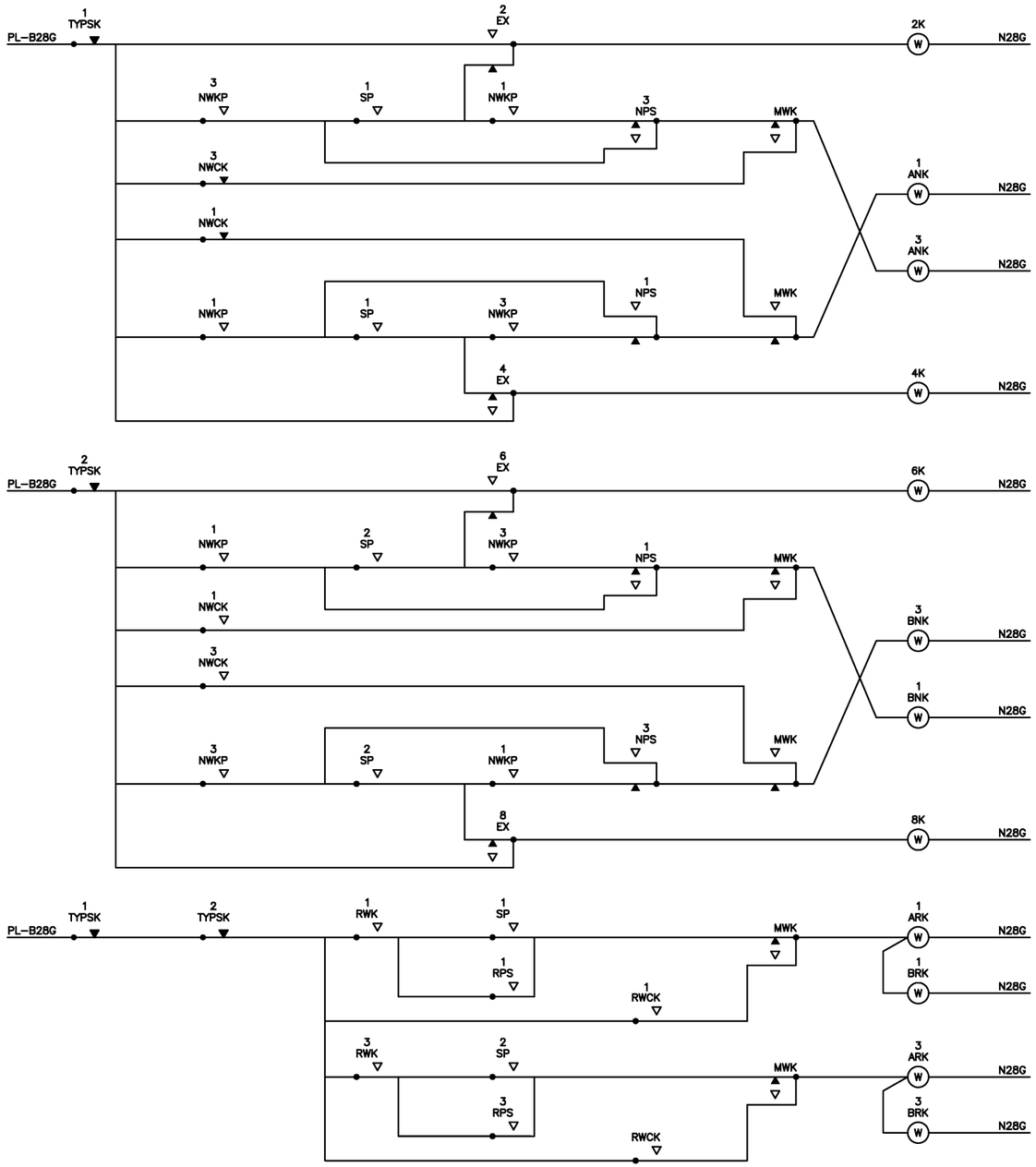

NOTES:

1. ADDITIONAL CIRCUITRY (NOT SHOWN) SHALL BE ADDED BY THE CONTRACTOR TO MEET THE "INDICATION TEST" REQUIREMENTS FOR EACH LED PANEL INDICATOR LIGHT. SEE SECTION 16956, INTERLOCKING CONTROL PANELS.

This Drawing Reflects a WMATA standard design approach. Project specific drawings must be developed by the Contractor which reflect this Design Philosophy

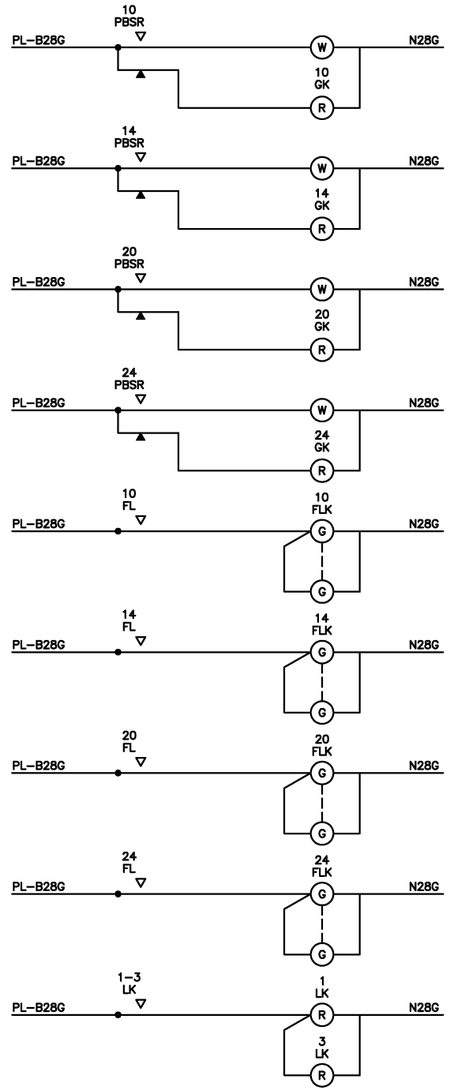

DESIGNED	GAH	2–00
DRAWN	JMR	2–00
CHECKED		
APPROVED		
UPDATED		

(DATE)

REFERENCE DRAWINGS

NUMBER	DESCRIPTION

REVISIONS

DATE	BY	DESCRIPTION
08/2001	SYSP	Revised and issued by the Authority

WASHINGTON METROPOLITAN AREA TRANSIT AUTHORITY

DEPARTMENT OF TRANSIT SYSTEM DEVELOPMENT
OFFICE OF SYSTEMS

SUBMITTED _____ DATE

APPROVED _____ DIRECTOR May 3, 2001 DATE

TYPICAL INTELOCKING CONTROL PANEL INDICATION CKTS, SIGNAL FLEETING & ROUTE

SCALE: NONE

DRAWING NO.: ST–TC–I–086

WMATA

TYPICAL EQUIPMENT LAYOUT

BOOK OF PLANS

DESIGNED GAH 2-00 DATE	REFERENCE DRAWINGS	REVISIONS	WASHINGTON METROPOLITAN AREA TRANSIT AUTHORITY
DRAWN JMR 2-00 DATE	NUMBER / DESCRIPTION	DATE / BY / DESCRIPTION	DEPARTMENT OF TRANSIT SYSTEM DEVELOPMENT OFFICE OF SYSTEMS
CHECKED DATE		08/2001 SYSP Revised and issued by the Authority	SUBMITTED DATE — APPROVED DIRECTOR May 3, 2001 DATE
APPROVED DATE			TYPICAL EQUIPMENT LAYOUT
UPDATED DATE			SCALE NONE — DRAWING NO. ST-TC-I-100

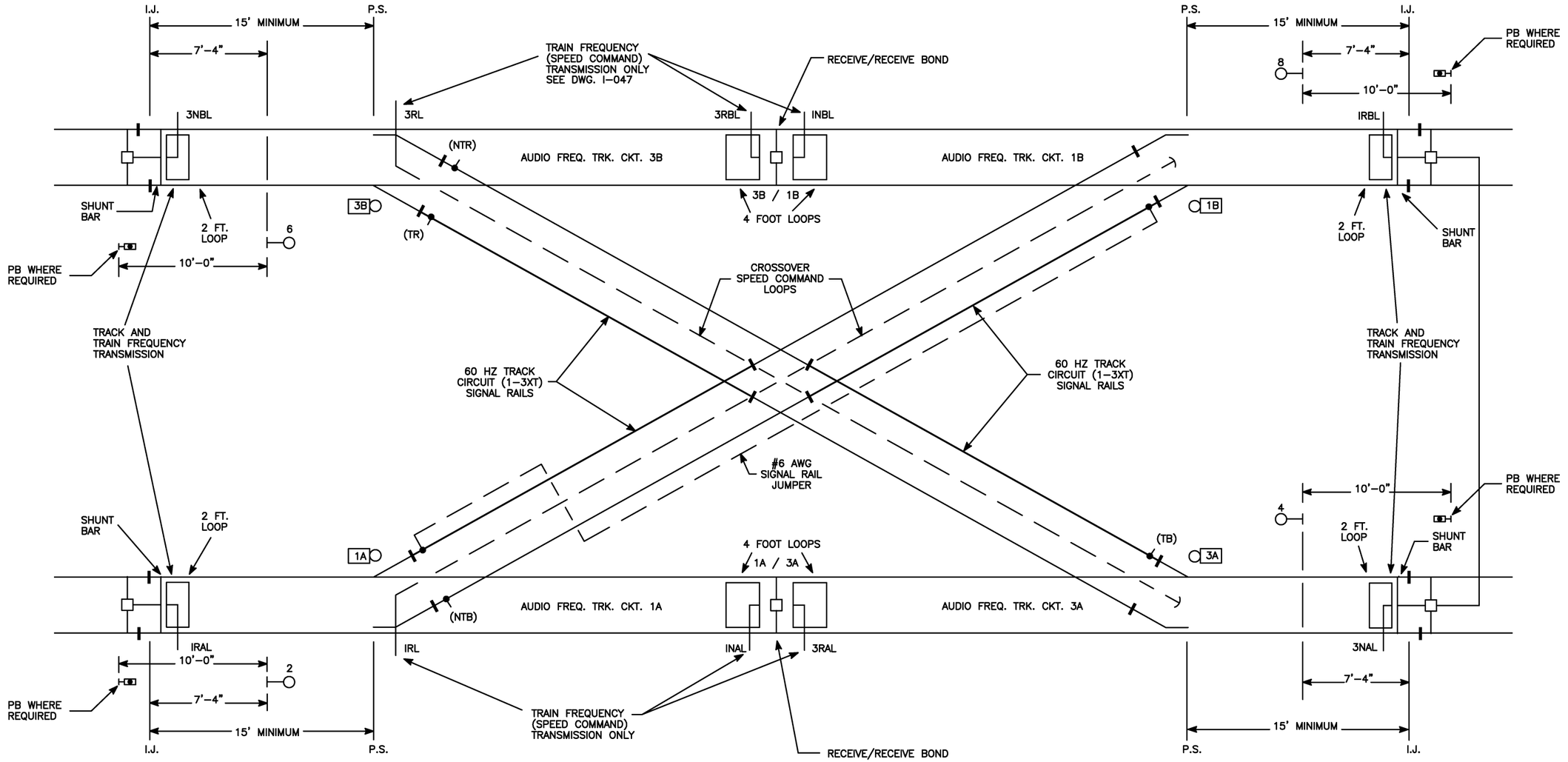

This Drawing Reflects a WMATA standard design approach. Project specific drawings must be developed by the Contractor which reflect this Design Philosophy

DESIGNED	GAH	2-00 DATE
DRAWN	JMR	2-00 DATE
CHECKED		DATE
APPROVED		DATE
UPDATED		DATE

REFERENCE DRAWINGS	
NUMBER	DESCRIPTION

REVISIONS		
DATE	BY	DESCRIPTION
08/2001	SYSP	Revised and issued by the Authority

WASHINGTON METROPOLITAN AREA TRANSIT AUTHORITY

DEPARTMENT OF TRANSIT SYSTEM DEVELOPMENT
OFFICE OF SYSTEMS

SUBMITTED _____ DATE

APPROVED _____ DIRECTOR May 3, 2001 DATE

TYPICAL INTERLOCKING CONFIGURATION

SCALE NONE

DRAWING NO. ST-TC-I-101

NOTES:
1. CABLES CONNECTING IMPEDANCE BOND TO RUNNING RAILS SHALL BE OF EQUAL LENGTH. THESE CABLES SHALL BE CLAMPED TO THE RUNNING RAILS AS SPECIFIED IN SECTIONS 16962 AND 16968.
2. ALL EQUIPMENT REQUIRED TO MOUNT THE INDUCTIVE TRACK LOOPS AS SPECIFIED SHALL BE PROVIDED BY THE CONTRACTOR.

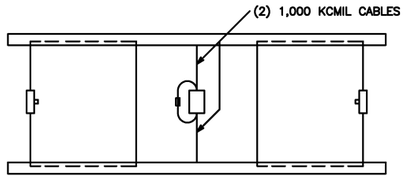

SCHEMATIC OF TYPICAL
4 FT INDUCTIVE LOOP ARRANGEMENT

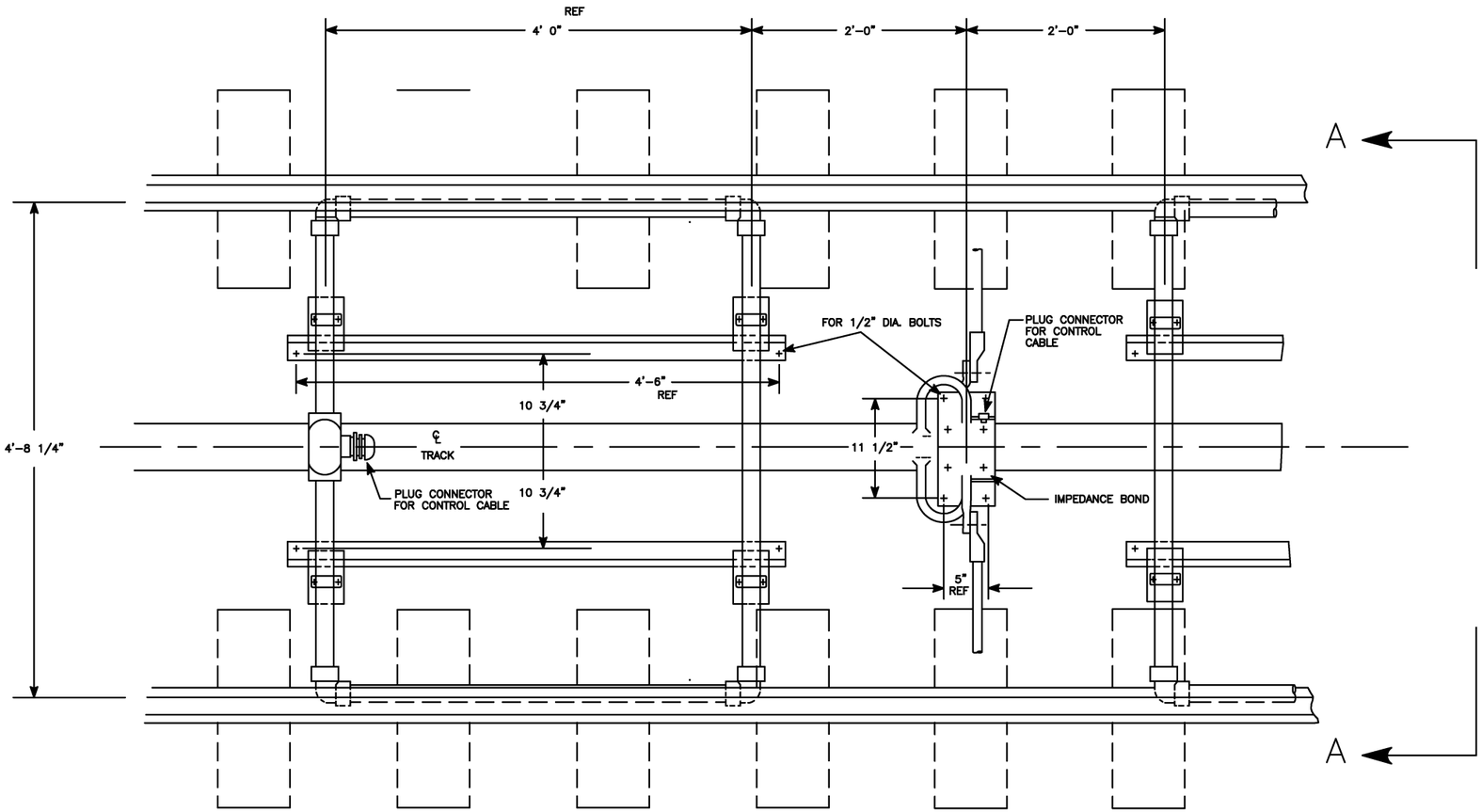

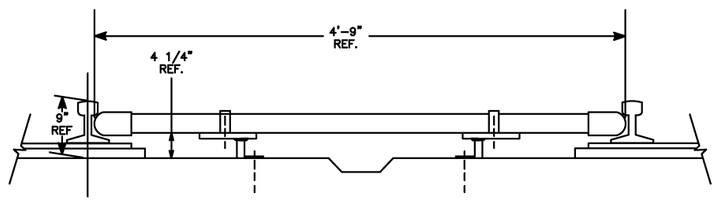

SECTION A – A

This Drawing Reflects a WMATA standard design approach. Project specific drawings must be developed by the Contractor which reflect this Design Philosophy

DESIGNED	GAH	2-00 DATE
DRAWN	JMR	2-00 DATE
CHECKED		DATE
APPROVED		DATE
UPDATED		DATE

REFERENCE DRAWINGS	
NUMBER	DESCRIPTION

REVISIONS		
DATE	BY	DESCRIPTION
08/2001	SYSP	Revised and issued by the Authority

WASHINGTON METROPOLITAN AREA TRANSIT AUTHORITY

DEPARTMENT OF TRANSIT SYSTEM DEVELOPMENT
OFFICE OF SYSTEMS

SUBMITTED _____ DATE

APPROVED DIRECTOR _____ May 3, 2001 DATE

TYPICAL INDUCTIVE TRACK LOOP LAYOUT – 4 FT LOOPS WITH IMPEDANCE BOND

SCALE	DRAWING NO.
NONE	ST-TC-I-103

NOTES:
1. INDUCTIVE TRACK LOOP AND SHUNT BAR SHALL BE MOUNTED AS CLOSE TO INSULATED JOINTS AS POSSIBLE.
2. THE TWO NEGATIVE RETURN CABLES CONSTITUTING THE SHUNT BAR SHALL BE OF EQUAL LENGTH. THESE CABLES SHALL BE CLAMPED TO THE RUNNING RAILS AS SPECIFIED IN SECTIONS 16962 AND 16968.
3. "SHUNT BAR" CABLES SHALL BE HELD AS CLOSE AS POSSIBLE TO THE INDUCTIVE LOOP FOR A MINIMUM WIDTH OF 42 INCHES.
4. ALL EQUIPMENT REQUIRED TO MOUNT THE INDUCTIVE TRACK LOOPS AS SPECIFIED SHALL BE PROVIDED BY THE CONTRACTOR.
5. EQUIVALENT LAYOUTS SHALL BE PROVIDED BY THE CONTRACTOR FOR BALLASTED TRACK.

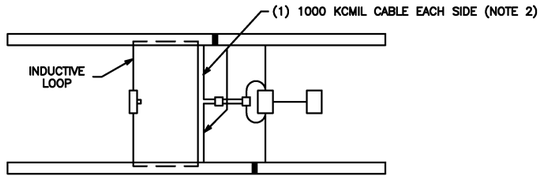

SCHEMATIC OF TYPICAL
2 FT INDUCTIVE LOOP ARRANGEMENT

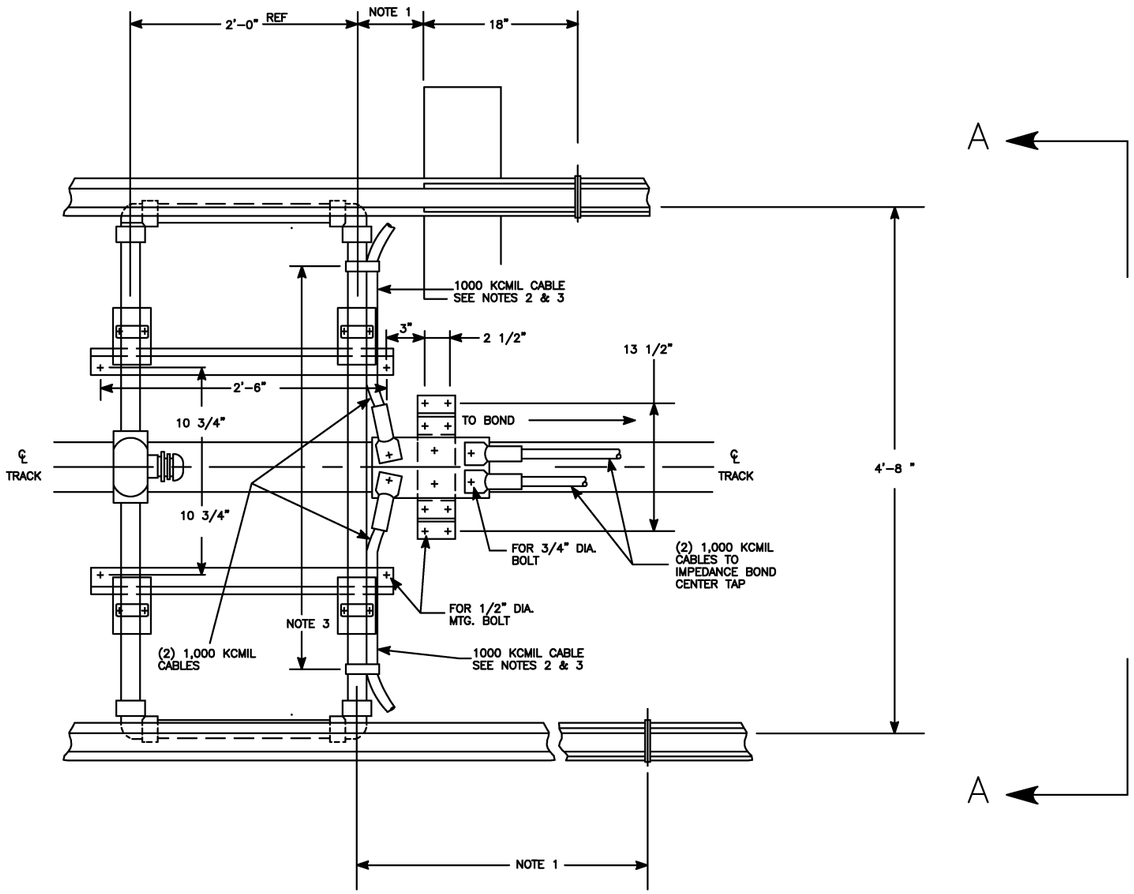

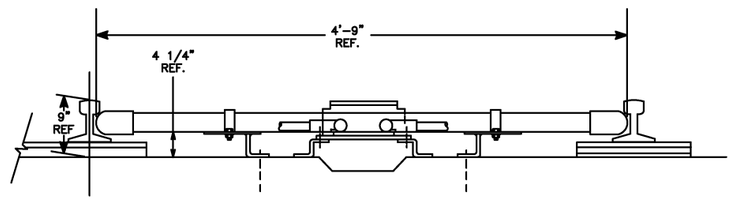

SECTION A – A

This Drawing Reflects a WMATA standard design approach. Project specific drawings must be developed by the Contractor which reflect this Design Philosophy

DESIGNED	GAH	2-00 DATE
DRAWN	JMR	2-00 DATE
CHECKED		DATE
APPROVED		DATE
UPDATED		DATE

REFERENCE DRAWINGS	
NUMBER	DESCRIPTION

REVISIONS		
DATE	BY	DESCRIPTION
08/2001	SYSP	Revised and issued by the Authority

WASHINGTON METROPOLITAN AREA TRANSIT AUTHORITY

DEPARTMENT OF TRANSIT SYSTEM DEVELOPMENT
OFFICE OF SYSTEMS

SUBMITTED _____ DATE

APPROVED DIRECTOR _____ May 3, 2001 DATE

TYPICAL INDUCTIVE TRACK LOOP LAYOUT – 2 FT LOOPS WITH SHUNT BAR

SCALE: NONE

DRAWING NO.: ST-TC-I-104

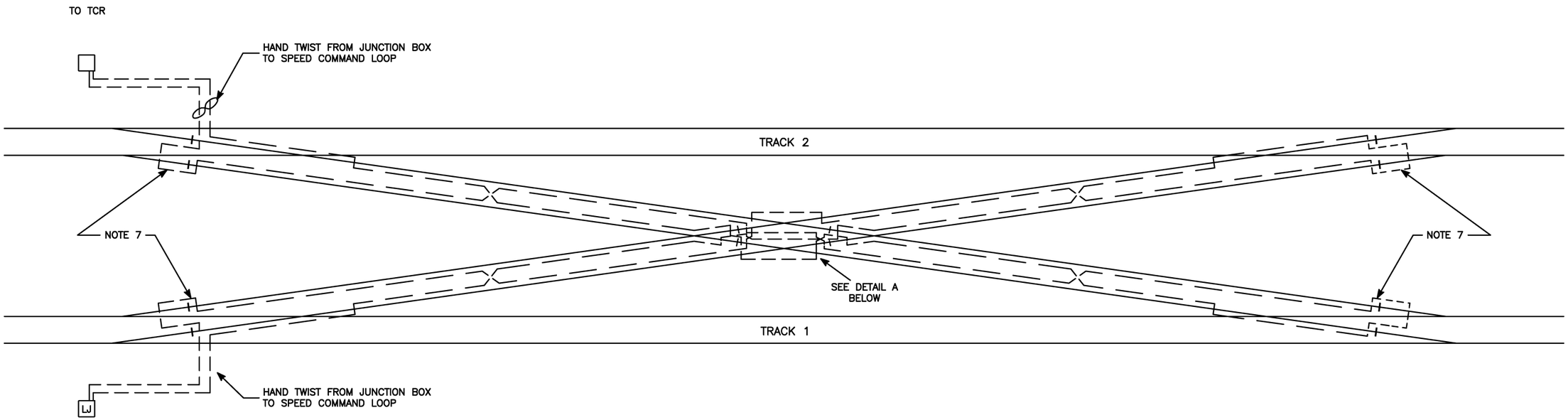

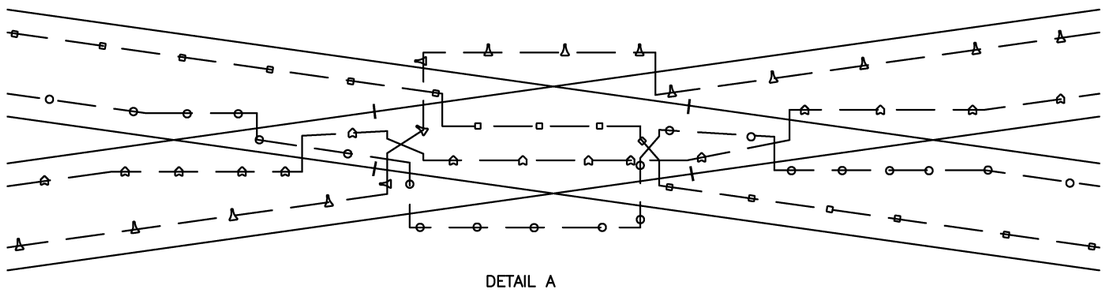

DETAIL A

NOTES:

1. LOOP WIRE SHALL BE SIZE No. 10 AWG FLEX INSTALLED IN PROTECTIVE HOSE.
2. HOSE SHALL BE CLAMPED TO THE CENTER OF THE WEB OF RAIL WHERE POSSIBLE.
3. HOSE SHALL BE SECURED TO TIES OR CONCRETE SLAB, AS APPLICABLE FOR TRANSPOSITIONS.
4. FOR LOOPS UNDER 150': ONE TRANSPOSITION. FOR LOOPS OVER 150': ODD NUMBER OF TRANSPOSITIONS, APPROXIMATELY ONE EVERY 75'.
5. THE CONTRACTOR SHALL SUBMIT DETAILED DRAWINGS FOR THE INSTALLATION OF SPEED COMMAND CROSSOVER LOOP LAYOUTS. INSTALLATION OF THESE LOOPS SHALL BE IN CONFORMANCE WITH THE APPROVED VERSIONS OF THE SUBMITTED DRAWINGS.
6. ALL EQUIPMENT NECESSARY TO INSTALL THE INDUCTIVE SPEED COMMAND LOOPS AS SPECIFIED SHALL BE PROVIDED BY THE CONTRACTOR.
7. LOOP MUST EXTEND BEYOND THE INSULATED JOINTS TO THE FIRST SET OF CONVENTIONAL RAIL JOINTS.
8. THE CONTRACTOR SHALL USE STAINLESS STEEL TIE WRAPS TO SECURE HOSE LOOP IN AREAS WHERE CLAMPS ARE NOT PRACTICABLE, NYLON TIE–WRAPS ARE UNACCEPTABLE.

This Drawing Reflects a WMATA standard design approach. Project specific drawings must be developed by the Contractor which reflect this Design Philosophy

DESIGNED	GAH	2–00 DATE
DRAWN	JMR	2–00 DATE
CHECKED		DATE
APPROVED		DATE
UPDATED		DATE

REFERENCE DRAWINGS

NUMBER	DESCRIPTION

REVISIONS

DATE	BY	DESCRIPTION
08/2001	SYSP	Revised and issued by the Authority

WASHINGTON METROPOLITAN AREA TRANSIT AUTHORITY

DEPARTMENT OF TRANSIT SYSTEM DEVELOPMENT
OFFICE OF SYSTEMS

SUBMITTED _____ DATE

APPROVED _____ DIRECTOR May 3, 2001 DATE

TYPICAL SPEED COMMAND CROSSOVER LOOP LAYOUT

SCALE: NONE

DRAWING NO.: ST–TC–I–105

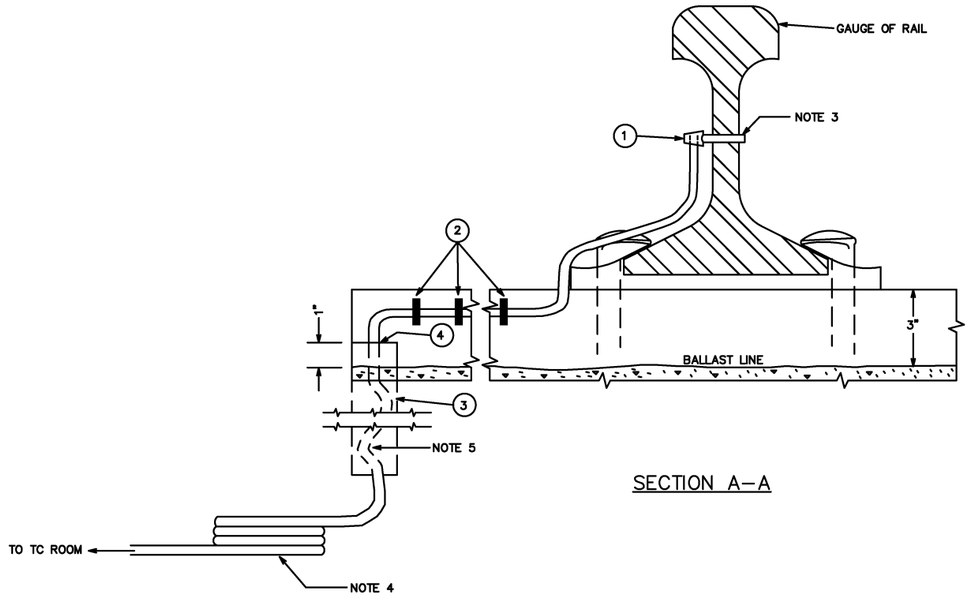

SECTION A–A

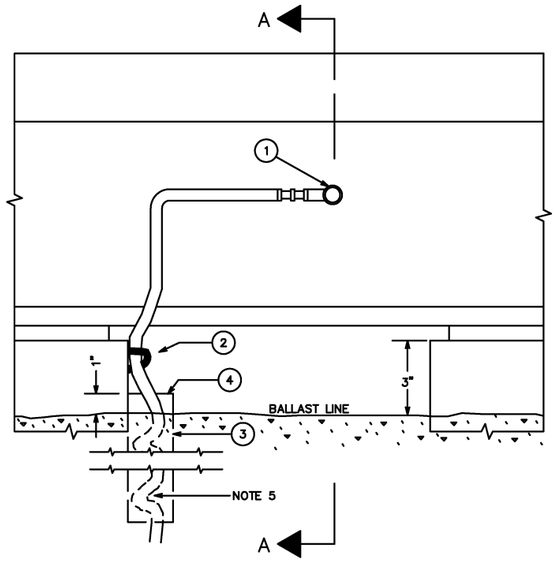

TYPICAL AC TRACK CIRCUIT CONNECTION

NOTES:

1. INSULATED JOINTS WILL BE FURNISHED AND INSTALLED BY OTHERS AT THE APPROXIMATE LOCATIONS SHOWN ON THE CONTRACT DRAWINGS.
2. INSTALL CONNECTOR AS CLOSE AS POSSIBLE TO INSULATED JOINT, BUT NOT MORE THAN 4" FROM END OF INSULATED JOINT AND WITHIN ± 3/16" OF THE NEUTRAL AXIS OF THE RAIL. CONNECTORS SHALL BE COATED WITH NO–OX–ID "E" GREASE.
3. 3/8" HOLE DRILLED IN RAIL FOR CONNECTOR. APPLY CONNECTOR SAME WORK DAY.
4. 5' CABLE SLACK IN 3 LOOPS, BURIED AT BOTTOM OF EXCAVATION.
5. 1 FT SLACK TO BE LEFT IN HOSE.
6. EQUIVALENT CONFIGURATION REQUIRED FOR "DIRECT FIXATION".
7. SEE SECTION 16949 FOR CONDUCTOR SIZE.

EQUIPMENT

1. CONNECTOR, UNITED STATES STEEL TYPE S–TNS
2. 1–3/4" x 3/8" x 144 COPPER WELD STAPLES – 1" BELOW TOP OF TIE. (3 – MINIMUM)
3. CORDURA HOSE 1" I.D. 24" LONG
4. SEALING COMPOUND (PER SPECIFICATIONS)

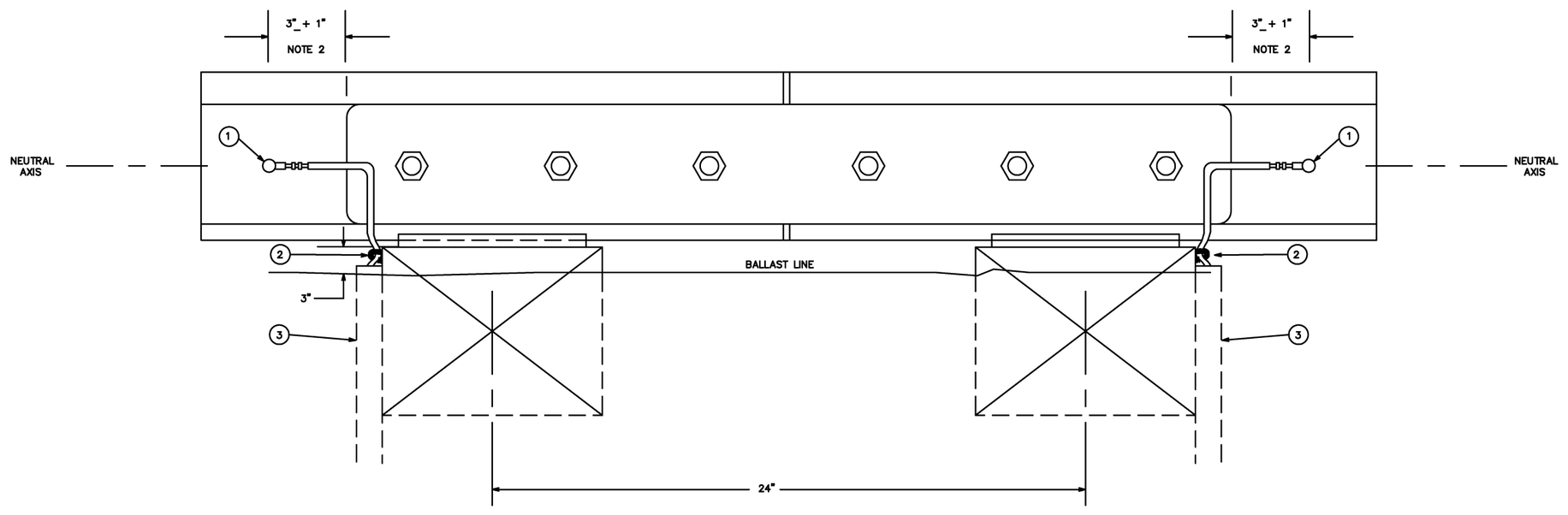

TYPICAL AC TRACK CIRCUIT CONNECTIONS AT AN INSULATED JOINT

This Drawing Reflects a WMATA standard design approach. Project specific drawings must be developed by the Contractor which reflect this Design Philosophy

DESIGNED	GAH	2–00 DATE
DRAWN	JMR	2–00 DATE
CHECKED		DATE
APPROVED		DATE
UPDATED		DATE

REFERENCE DRAWINGS

NUMBER	DESCRIPTION

REVISIONS

DATE	BY	DESCRIPTION
08/2001	SYSP	Revised and issued by the Authority

WASHINGTON METROPOLITAN AREA TRANSIT AUTHORITY

DEPARTMENT OF TRANSIT SYSTEM DEVELOPMENT
OFFICE OF SYSTEMS

SUBMITTED _____ DATE

APPROVED DIRECTOR _____ May 3, 2001 DATE

TYPICAL AC TRACK CIRCUIT CONNECTIONS

SCALE: NONE

DRAWING NO.: ST–TC–I–107

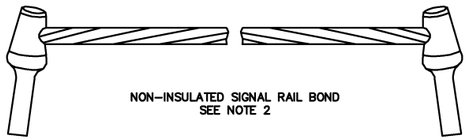

NON-INSULATED SIGNAL RAIL BOND
SEE NOTE 2

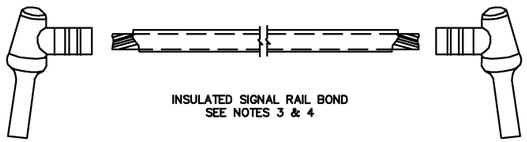

INSULATED SIGNAL RAIL BOND
SEE NOTES 3 & 4

SIGNAL RAIL BONDS

NOTES:

1. EQUIVALENT CONFIGURATION REQUIRED FOR "DIRECT FIXATION" TRACK.
2. SIGNAL BONDS: ERICO TYPE SBPAJB-"A", OR APPROVED EQUAL. (16 EXTRA GALVANIZED STEEL WIRES) AND 3 COPPER WIRES).
3. THE CONTRACTOR SHALL PROVIDE INSULATED SIGNAL RAIL BONDS WHEREVER NECESSARY TO PREVENT POSSIBLE CONTACT WITH THE CONCRETE INVERT, NEGATIVE-RETURN RAILS OR BONDS, OR TO PREVENT POSSIBLE "SHORT CIRCUITING" OF THE DESIRED MAXIMUM LENGTH SERIES PATH FOR THE SIGNAL RAIL CIRCUIT.
4. THE CONTRACTOR SHALL ASSEMBLE INSULATED SIGNAL RAIL BONDS OF THE APPROPRIATE LENGTH USING 2 TRACK CONNECTORS AND THE APPROPRIATE LENGTH OF INSULATED WIRE. THE INSULATED SIGNAL RAIL BONDS SHALL CLOSELY MATCH (AS PRACTICABLE) THE SIZE, COMPOSITION, AND GAUGE OF THE NON-INSULATED SIGNAL RAIL BOND.
5. THE CONTRACTOR SHALL PROVIDE DUAL SIGNAL-RAIL CROSS BONDS AT THE INSULATED JOINTS AT THE ENDS OF THE SIGNAL RAILS EXTENDING BEYOND THE FROGS TO PROVIDE A BONDED SERIES PATH FOR THE SIGNAL RAIL CURRENT. SEE SECTION 16968.
6. THE TRACKAGE DIAGRAM SHOWN REPRESENTS A TYPICAL NO. 8 DIAMOND CROSSOVER ON 14 FT. TRACK CENTERS AND THEREFORE ILLUSTRATES ONLY THE MINIMUM AMOUNT OF SIGNAL RAIL BONDING REQUIRED. THE CONTRACTOR SHALL PROVIDE THE SIGNAL RAIL BONDING SHOWN PLUS ANY ADDITIONAL SIGNAL RAIL BONDING NECESSARY TO BOND AROUND ADDITIONAL RAIL JOINTS INCLUDED IN CROSSOVERS OF LARGER SIZE OR ON WIDER TRACK CENTERS IN THE MANNER SPECIFIED IN SECTION 16968, ALL AT NO ADDITIONAL COST TO THE AUTHORITY.
7. THE CONTRACTOR SHALL USE PIN-TYPE SIGNAL RAIL BONDS OF THE TYPE SHOWN WHEREVER POSSIBLE. WHERE CLOSE CLEARANCES OR LACK OF SPACE PRECLUDES THE USE OF PIN-TYPE BONDS, CADWELDED RAILHEAD BONDS OF A TYPE PREVIOUSLY APPROVED BY THE ENGINEER MAY BE SUBSTITUTED.

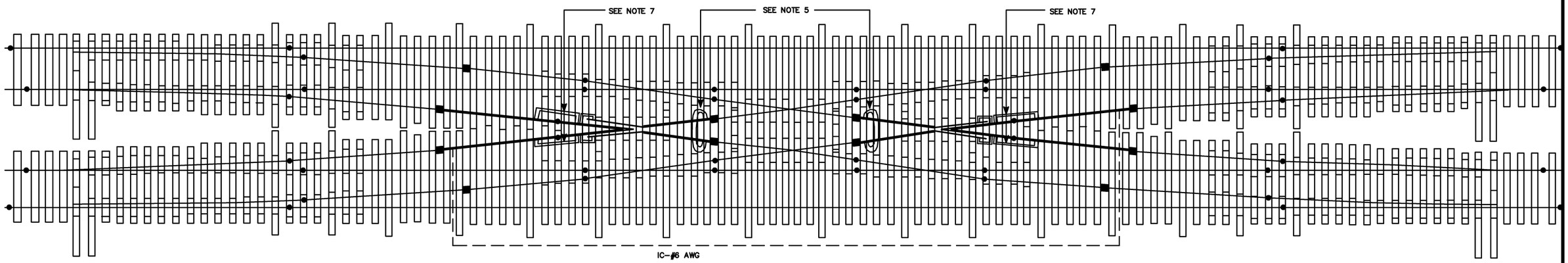

DIAMOND CROSSOVER

LEGEND

- RAIL JOINT, BY OTHERS
- INSULATED JOINT, BY OTHERS
- SIGNAL RAIL
- NEGATIVE RETURN RAIL
- BONDED SIGNAL RAIL JOINT (2 BONDS PER RAIL JOINT)
- BONDED SIGNAL RAIL TO SIGNAL WING RAIL AT SIGNAL RAIL FROG (4 SIGNAL BONDS PER FROG)
- NO. 6 AWG FLEX CABLE

This Drawing Reflects a WMATA standard design approach. Project specific drawings must be developed by the Contractor which reflect this Design Philosophy

DESIGNED	GAH	2-00 DATE
DRAWN	JMR	2-00 DATE
CHECKED		DATE
APPROVED		DATE
UPDATED		DATE

REFERENCE DRAWINGS

NUMBER	DESCRIPTION

REVISIONS

DATE	BY	DESCRIPTION
08/2001	SYSP	Revised and issued by the Authority

WASHINGTON METROPOLITAN AREA TRANSIT AUTHORITY

DEPARTMENT OF TRANSIT SYSTEM DEVELOPMENT
OFFICE OF SYSTEMS

SUBMITTED _____ DATE

APPROVED _____ DIRECTOR May 3, 2001 DATE

TYPICAL MAINLINE SIGNAL RAIL BONDING

SCALE: NONE

DRAWING NO.: ST-TC-I-108

This Drawing Reflects a WMATA standard design approach. Project specific drawings must be developed by the Contractor which reflect this Design Philosophy

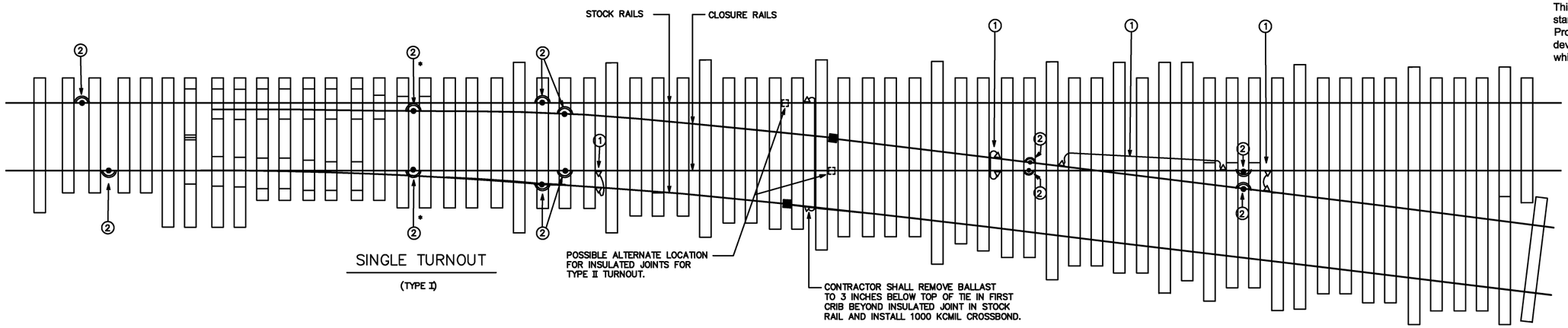

SINGLE TURNOUT

(TYPE I)

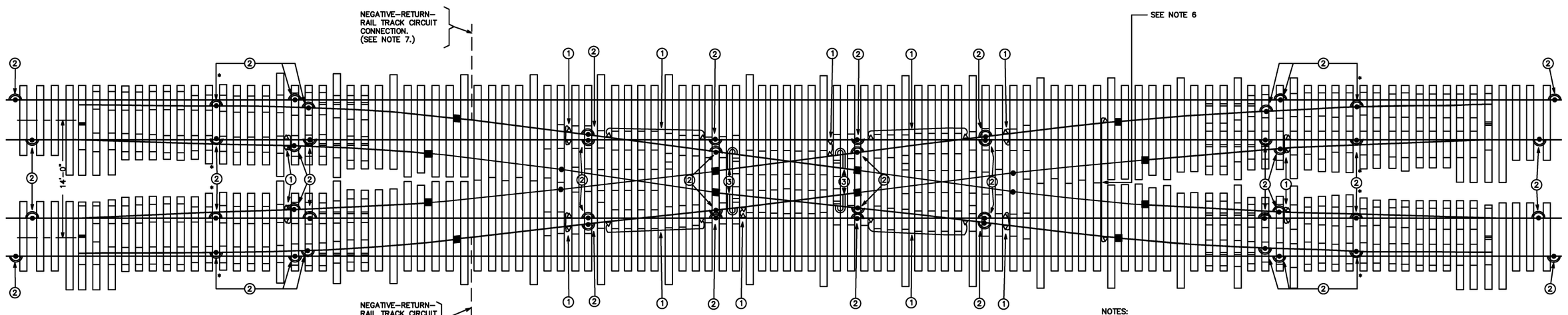

DIAMOND CROSSOVER

EQUIPMENT

1. 1,000 KCMIL FROG OR CROSSBOND CABLE WITH TWO CLAMPS, PER DETAIL "A".
2. TWO 500 KCMIL BONDS, ONE ON EACH SIDE OF THE RAILS, SHALL BE COMPRESSION BOLTED TO THE WEB OF THE RAILS AT THE CENTERLINE OF THE WEB, 4 INCHES BEYOND THE JOINT BARS, AS SHOWN IN DETAIL "B", EXCEPT THAT ONLY ONE 500 KCMIL BOND SHALL BE USED WHEN BONDING TO THE HEELS OF SWITCH POINT RAILS.
3. TWO, LONG 250 KCMIL RAILHEAD BONDS SHALL BE EXOTHERMICALLY WELDED FROM THE FIELD SIDE OF THE INNER FROG RAIL TO THE FIELD SIDE OF THE OUTER FROG RAIL GUARD, OR ONE 500 KCMIL ROPELAY BOND CABLE SHALL BE COMPRESSION–BOLTED TO THE WEBS OF THE TWO RAILS.

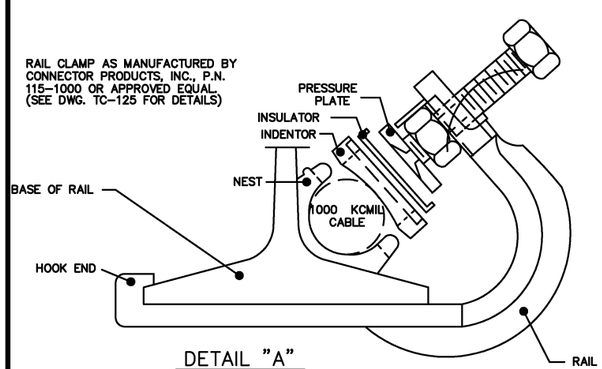

DETAIL "A"

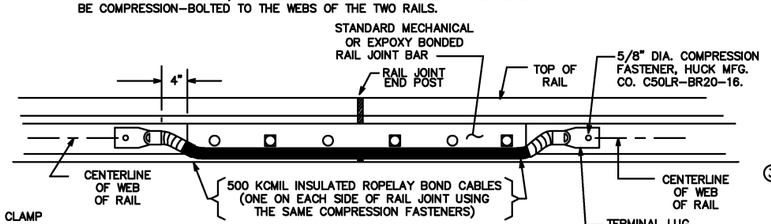

DETAIL "B" (N.T.S.)

(SEE NOTES 2 & 4)

LEGEND

- NEGATIVE RETURN RAIL (THIS DRAWING ONLY)
- SIGNAL RAIL
- RAIL JOINTS
- INSULATED RAIL JOINTS
- NEGATIVE RETURN RAIL JOINT WITH 2–500 KCMIL ROPELAY INSULATED BOND CABLES COMPRESSION BOLTED TO THE WEB OF THE RAILS AT THE CENTERLINE OF THE WEB, 4 INCHES BEYOND THE ENDS OF THE JOINT BAR, AS SHOWN IN DETAIL "B".
- * ONLY 1–500 KCMIL BOND FOR SWITCH POINT HEELS.
- (3) TWO–250 KCMIL LONG, WELDED RAILHEAD BONDS, OR ONE 500 KCMIL COMPRESSION–BOLTED RAIL WEB BOND.
- (1) BASE–OF–RAIL CLAMPED CONNECTION FOR 1000 KCMIL BOND. SEE DETAIL "A". SEE NOTE 2.

NOTES:

1. EQUIVALENT CONFIGURATION REQUIRED FOR "DIRECT FIXATION" TRACK.
2. THE CONTRACTOR SHALL PROVIDE NEGATIVE RETURN RAIL BONDING AROUND ALL NEGATIVE–RETURN NON–INSULATED JOINTS AND ALL ABANDONED OR EXTRANEOUS INSULATED JOINTS WITHIN INTERLOCKING LIMITS. (SEE DETAIL "B"). THIS BONDING SHALL CONSIST OF TWO 500 KCMIL, COMPRESSION–BOLTED RAIL–WEB BONDS, BACK–TO–BACK WHEREVER POSSIBLE, EXCEPT AT SWITCH POINT RAIL HEELS, WHERE ONLY ONE 500 KCMIL COMPRESSION BOLTED BOND, OR TWO 250 KCMIL WELDED RAIL–HEAD BONDS SHALL BE APPLIED. WHERE IT IS NOT POSSIBLE TO INSTALL THE REQUIRED NUMBER OF 500 KCMIL BOLTED BONDS. THE CONTRACTOR SHALL USE ONE 1000 KCMIL BASE–OF–RAIL CLAMPED BOND INSTEAD.
3. THE CONTRACTOR SHALL PROVIDE 1000 KCMIL BASE–OF–RAIL CLAMPED BONDS FOR NEGATIVE–RETURN PURPOSES IN THE FOLLOWING SITUATIONS:
   - AROUND RAIL FROGS WHICH DO NOT HAVE A CONTINUOUS RUNNING RAIL THROUGH THE FROG FOR THE DESIRED ELECTRICAL PATHWAY.
   - BETWEEN ADJACENT, NON–SEQUENTIAL RUNNING RAILS.
   - AS TRANSPOSITION BONDS AT THE CENTER OF SINGLE–CROSSOVER AC TRACK CIRCUITS AND AT SINGLE TURNOUTS.
4. THE CONTRACTOR SHALL PROVIDE COMPRESSION–BOLTED RAIL WEB NEGATIVE–RETURN BONDING (2–500 KCMIL BONDS, BACK–TO–BACK) AROUND ALL ABANDONED OR EXTRANEOUS INSULATED JOINTS IN THE RUNNING RAILS OUTSIDE INTERLOCKING LIMITS. (SEE DETAIL "B").
5. THE CONTRACTOR SHALL INSPECT THE TRACKWORK TO ENSURE THAT NO SIGNAL RAIL IS SHUNTED TO A NEGATIVE–RETURN RAIL BY A TIE PLATE OR OTHER TRACK FASTENING DEVICE.
6. THIS SPECIAL, SINGLE 1000 KCMIL "CROSSBOND" SHALL BE PROVIDED ONLY IF THERE IS NO CONVENTIONAL, IMPEDANCE–BOND CROSSBONDING AT EITHER END OF THE INTERLOCKING OR WITHIN 300 FEET OF EITHER END OF THE INTERLOCKING LIMITS. RAIL CLAMPS FOR THIS BOND SHALL BE APPLIED AS CLOSE AS POSSIBLE TO THE INSULATED JOINTS AT EITHER END OF THE CROSSOVER TRACK CIRCUIT. NEGATIVE–RETURN–RAIL TRACK CIRCUIT CONNECTIONS FOR THE DIAMOND TRACK CIRCUIT SHALL BE MADE AT THE OPPOSITE END OF THE CROSSOVER AS INDICATED HERE AND ON THE APPLICABLE DOUBLE–LINE TRACK PLAN DRAWING(S). SEE NOTE 7.
7. THESE CONNECTIONS SHALL BE MADE AT THE END OF THE CROSSOVER TRACK CIRCUIT FARTHEST AWAY FROM THE NEAREST CONVENTIONAL OR SPECIAL CROSSBONDING BETWEEN THE MAINLINE TRACKS. THE CONTRACTOR SHALL MAKE THE NEGATIVE–RETURN–RAIL TRACK CIRCUIT CONNECTIONS FOR THE DIAMOND TRACK CIRCUIT AS CLOSE TO THE INSULATED JOINTS AS POSSIBLE.

DESIGNED	GAH	2–00 DATE
DRAWN	JMR	2–00 DATE
CHECKED		DATE
APPROVED		DATE
UPDATED		DATE

REFERENCE DRAWINGS

NUMBER	DESCRIPTION

REVISIONS

DATE	BY	DESCRIPTION
08/2001	SYSP	Revised and issued by the Authority

WASHINGTON METROPOLITAN AREA TRANSIT AUTHORITY

DEPARTMENT OF TRANSIT SYSTEM DEVELOPMENT
OFFICE OF SYSTEMS

SUBMITTED _____ DATE

APPROVED _____ DIRECTOR May 3, 2001 DATE

TYPICAL MAINLINE NEGATIVE RETURN BONDING

LOCATION: SYSTEMWIDE

SCALE: NONE

DRAWING NO.: ST–TCI–109

LAYOUT "A"

G.R.S. CO. TYPE
MODEL 55, OR APPROVED EQUAL

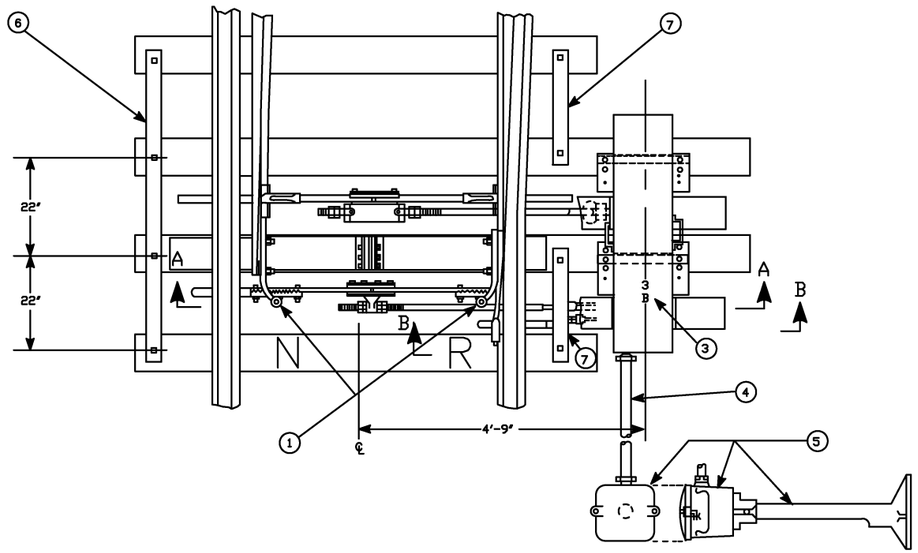

LAYOUT "B"

U.S. & S. CO. TYPE
STYLE M-3, OR APPROVED EQUAL

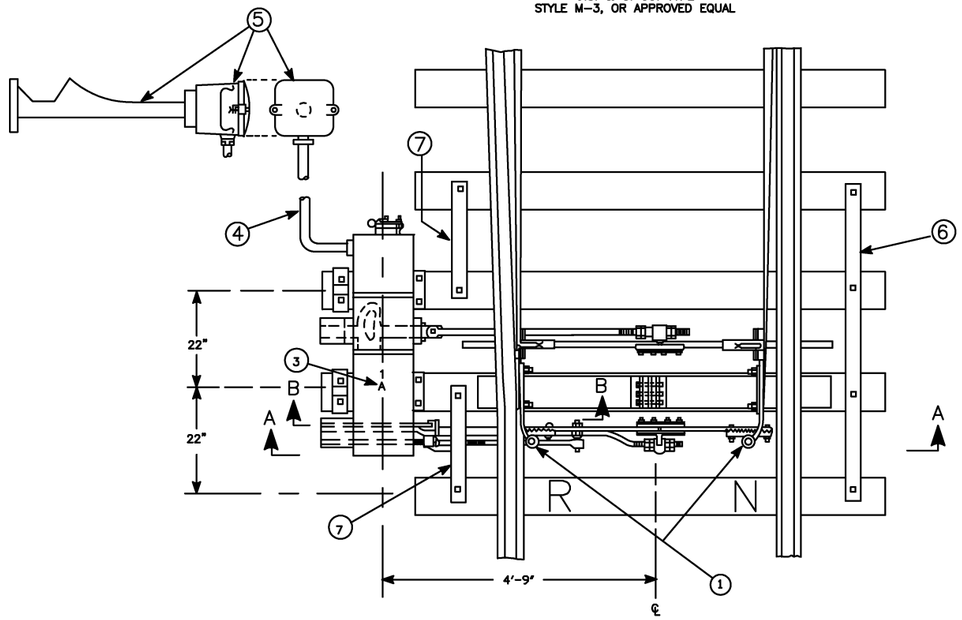

NOTES

1. LAYOUTS SHOWN REPRESENT REQUIREMENTS OF INSTALLATION AND ARE NOT INTENDED TO SHOW SPECIFIC TYPE OF EQUIPMENT OR PARTS IN LAYOUT.
2. CONTRACTOR SHALL MARK, DRILL, AND APPLY APPROVED HARDWARE TO MOUNT SWITCH-AND-LOCK MOVEMENT TO SWITCH TIES IN PROPER ALIGNMENT WITH THE SWITCH POINTS.
3. CONTRACTOR SHALL DAP SWITCH TIES AS REQUIRED TO PROVIDE PROPER SWITCH-AND-LOCK MOVEMENT HEIGHT.
4. LETTERS "N" & "R" SHALL BE ATTACHED IN THE PROPER POSITION TO INDICATE, RESPECTIVELY, THE NORMAL AND REVERSE POSITIONS OF THE SWITCH POINTS AS SPECIFIED IN SECTION 16964.
5. RODS, POINT LUGS, BRACKETS, LETTERS, CLAMPS, BOLTS, NUTS, AND WASHERS SHALL BE IN ACCORDANCE WITH THE WRITTEN SPECIFICATIONS. THE CENTERLINE OF SWITCH MACHINE MOUNTING BOLTS SHALL NOT BE LESS THAN 2 3/4 INCHES FROM THE EDGE OF A TIE.
6. TIES SHALL BE DAPPED ONLY TO THE EXTENT NECESSARY FOR THE PROPER INSTALLATION OF THE SWITCH MACHINE. BALLAST SHALL BE BUILT UP AND TAMPED UNDER THE TIES SUPPORTING THE SWITCH MACHINE AND LEVELED TO THE TOP OF THE TIES FOR A DISTANCE OF 2 FEET IN ALL DIRECTIONS EXCEPT WHERE SWITCH RODS ARE LOCATED.

EQUIPMENT

1. SWITCH POINT LUGS SHALL BE MANUFACTURER'S STANDARD.
2. 3/4" SQ. HD. BOLTS, CAST IRON WASHER PER AAR DWG. 1458C
3. SWITCH MECHANISM NUMBER, PER ARTICLE 3.5.19.
4. "CORDURA" HOSE OR METALLIC FLEXIBLE CONDUIT, WITH CLAMPS, TO WAYSIDE SWITCH JUNCTION BOX.
5. CAST IRON JUNCTION BOX AND PEDESTAL.
6. LONG TIE STRAPS SHALL BE 1/2" X 2" X 6'-0" STEEL BARS, FASTENED WITH 3/4" X 4" DRIVE LAGS.
7. SHORT TIE STRAPS SHALL BE 1/2" X 2" X 2'-3" STEEL BARS, FASTENED WITH 3/4" X 4" DRIVE LAGS.

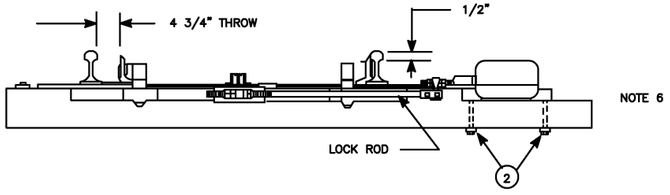

SECTION A-A

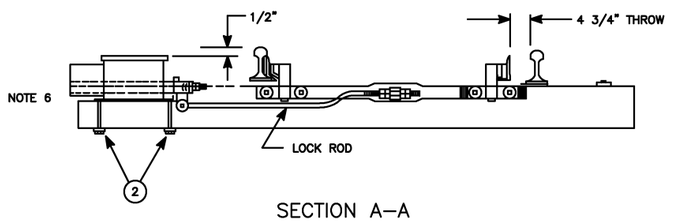

SECTION A-A

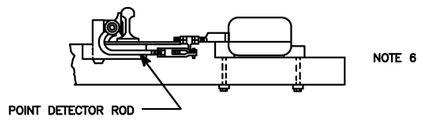

SECTION B-B

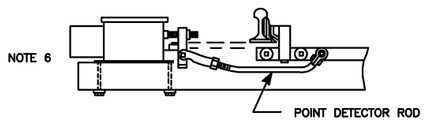

SECTION B-B

This Drawing Reflects a WMATA standard design approach. Project specific drawings must be developed by the Contractor which reflect this Design Philosophy

DESIGNED	GAH	2-00 DATE
DRAWN	JMR	2-00 DATE
CHECKED		DATE
APPROVED		DATE
UPDATED		DATE

REFERENCE DRAWINGS

NUMBER	DESCRIPTION

REVISIONS

DATE	BY	DESCRIPTION
08/2001	SYSP	Revised and issued by the Authority

WASHINGTON METROPOLITAN AREA TRANSIT AUTHORITY

DEPARTMENT OF TRANSIT SYSTEM DEVELOPMENT
OFFICE OF SYSTEMS

SUBMITTED _____ DATE

APPROVED _____ DIRECTOR May 3, 2001 DATE

TYPICAL SWITCH-AND-LOCK MOVEMENT LAYOUT ON BALLASTED TRACK

SCALE: NONE

DRAWING NO.: ST-TC-I-111

LAYOUT "A"

G.R.S. CO. TYPE
MODEL 55, OR APPROVED EQUAL

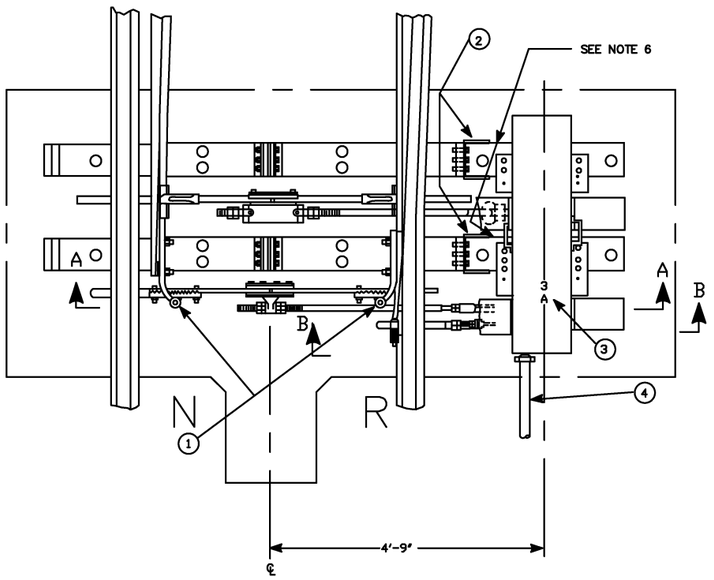

LAYOUT "B"

U.S. & S. CO. TYPE
STYLE M-3, OR APPROVED EQUAL

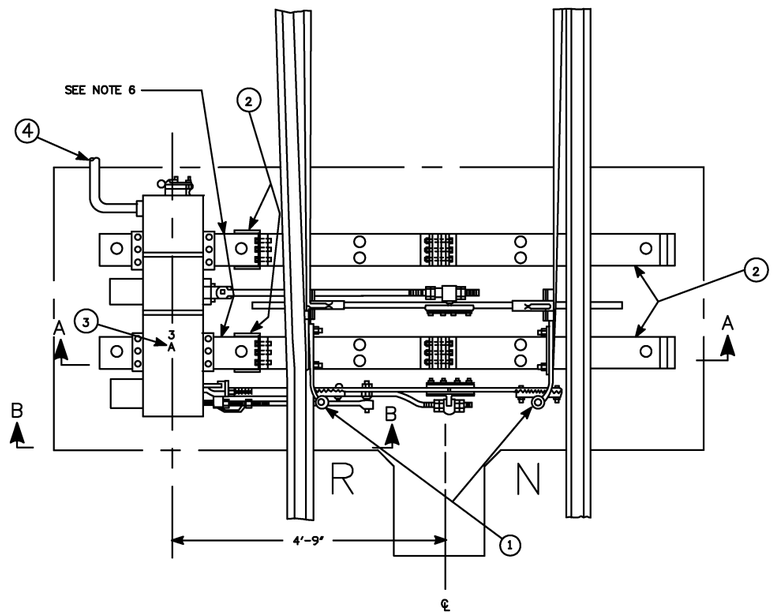

NOTES

1. LAYOUTS SHOWN REPRESENT REQUIREMENTS OF INSTALLATION AND ARE NOT INTENDED TO SHOW SPECIFIC TYPE OF EQUIPMENT OR PARTS IN LAYOUT.
2. CONTRACTOR SHALL MARK, DRILL, AND APPLY APPROVED HARDWARE TO MOUNT SWITCH-AND-LOCK MOVEMENT TO SPECIAL GAUGE PLATES IN PROPER ALIGNMENT WITH THE SWITCH POINTS.
3. CONTRACTOR SHALL SHIM SWITCH-AND-LOCK MOVEMENTS TO PROPER HEIGHT.
4. LETTERS "N" & "R" SHALL BE PLACED IN THE PROPER POSITION TO INDICATE, RESPECTIVELY, THE NORMAL AND REVERSE POSITIONS OF THE SWITCH POINTS AS SPECIFIED IN SECTION 16964.
5. RODS, POINT LUGS, BRACKETS, LETTERING, CLAMPS, BOLTS, NUTS, AND WASHERS SHALL BE IN ACCORDANCE WITH THE WRITTEN SPECIFICATIONS. THE CENTERLINE OF SWITCH MACHINE MOUNTING BOLTS SHALL NOT BE LESS THAN 2 3/4 INCHES FROM THE EDGE OF THE MOUNTING PAD.
6. WHERE SWITCH-AND-LOCK MOVEMENTS ARE TOO HIGH TO MEET CLEARANCE REQUIREMENTS WHEN MOUNTED ON THE SPECIAL GAUGE PLATE EXTENSIONS FURNISHED BY OTHERS, THE CONTRACTOR SHALL PROVIDE SPECIAL GAUGE PLATE EXTENSIONS OF A DESIGN PREVIOUSLY APPROVED BY THE ENGINEER IN ORDER TO LOWER THE SWITCH-AND-LOCK MOVEMENTS BY THE NECESSARY AMOUNT. THE CONTRACTOR SHALL PERFORM ALL ADDITIONAL CHIPPING & GROUTING NECESSARY TO ACCOMMODATE THESE SPECIAL GAUGE PLATE EXTENSIONS IN A MANNER PREVIOUSLY APPROVED BY THE ENGINEER, ALL AT NO ADDITIONAL COST TO THE AUTHORITY.

EQUIPMENT

(1) SWITCH POINT LUGS SHALL BE MANUFACTURER'S STANDARD.

(2) SPECIAL GAUGE PLATES FURNISHED BY OTHERS.

(3) SWITCH MECHANISM NUMBER, PER SECTION 16954.

(4) "CORDURA" HOSE OR METALLIC FLEXIBLE CONDUIT, WITH CLAMPS, TO WAYSIDE SWITCH JUNCTION BOX.

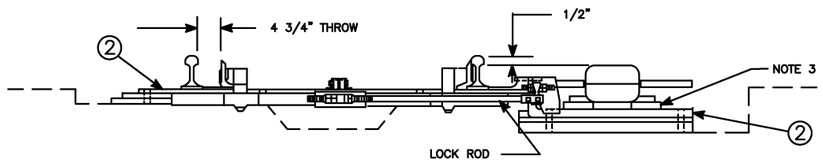

SECTION A-A

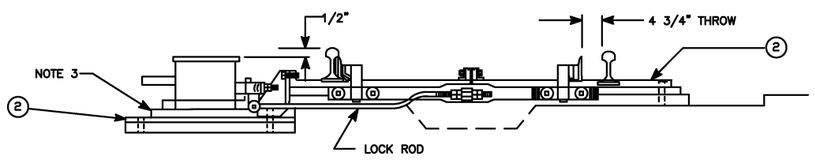

SECTION A-A

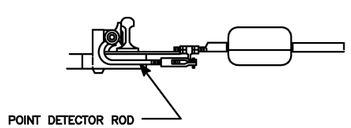

SECTION B-B

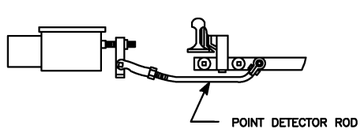

SECTION B-B

This Drawing Reflects a WMATA standard design approach. Project specific drawings must be developed by the Contractor which reflect this Design Philosophy

DESIGNED	GAH	2-00 DATE
DRAWN	JMR	2-00 DATE
CHECKED		DATE
APPROVED		DATE
UPDATED		DATE

REFERENCE DRAWINGS

NUMBER	DESCRIPTION

REVISIONS

DATE	BY	DESCRIPTION
08/2001	SYSP	Revised and issued by the Authority

WASHINGTON METROPOLITAN AREA TRANSIT AUTHORITY

DEPARTMENT OF TRANSIT SYSTEM DEVELOPMENT
OFFICE OF SYSTEMS

SUBMITTED _____ DATE

APPROVED _____ DIRECTOR May 3, 2001 DATE

TYPICAL SWITCH-AND-LOCK MOVEMENT LAYOUT DIRECT FIXATION

SCALE: NONE

DRAWING NO.: ST-TC-I-112

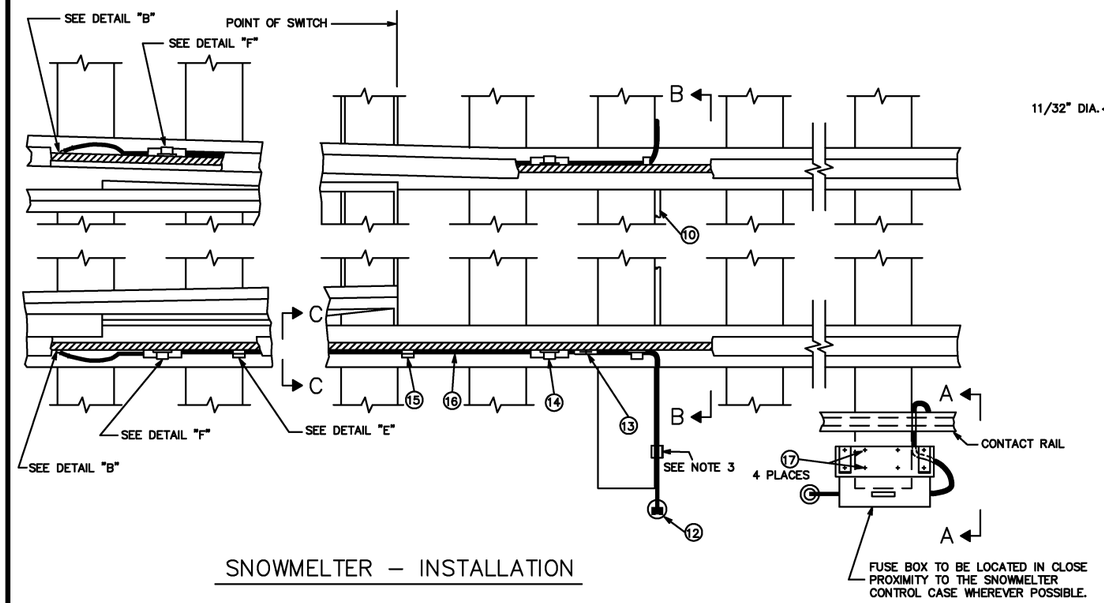

SNOWMELTER – INSTALLATION

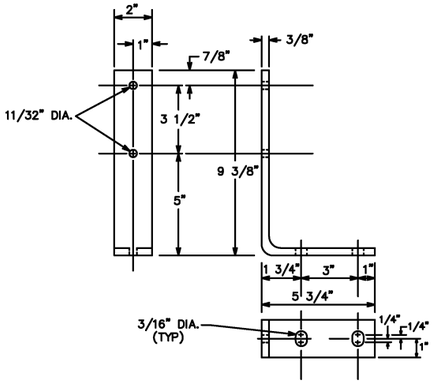

DETAIL "A"
ITEM (2)

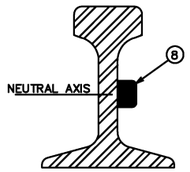

DETAIL "B"
ITEM (8)

NOTES:

1. ALL HARDWARE SHALL BE GALVANIZED UNLESS OTHERWISE SHOWN.
2. ALL LOCK WASHERS SHALL BE CADMIUM PLATED.
3. CONNECT HEATER CABLE TAIL & NO. 6 STRANDED COPPER EXTENSION CABLE WITH NICOPRESS SPLICE CONNECTOR. INSULATE CONNECTION WITH HEAT SHRINK TUBING, 1000V RATING.
4. WHEN SNOWMELTER CONTROL CASE IS LOCATED ON OPPOSITE SIDE OF RUNNING RAILS FROM CONTACT RAIL, A 3" FRE CONDUIT SHALL BE PROVIDED FOR SNOWMELTER WIRES CROSSING TRACKS.
5. EQUIVALENT CONFIGURATION REQUIRED FOR DIRECT FIXATION INSTALLATION.
6. CONTRACTOR SHALL PROVIDE FUSE BOX AND FUSE OF APPROPRIATE SIZE FOR EACH INDIVIDUAL SNOWMELTER CONTROL CASE.

ITEM NO.	DESCRIPTION	QTY. REQ. PER ASSY
(1)	FUSE BOX FOR CONTACT RAIL TAPS	1
(2)	L BRACKET – WOOD TIE	2
(3)	1/2" X 1 1/2" L. HEX HEAD MACHINE BOLT	4
(4)	1/2" FLAT WASHER	4
(5)	1/2" LOCK WASHER	4
(6)	1/2" HEX NUT	4
(7)	3/8" PLATE – A.S.T.M. – A36	1
(8)	EXOTHERMIC CONNECTION	AS REQ.
(9)	INSULATED WIRE CLAMPS W/NAILS	AS REQ.
(10)	1" PVC CONDUIT	AS REQ.
(11)	CONDUIT CLAMP	AS REQ.
(12)	1" I.D. X 2' L. HEAVY DUTY RUBBER HOSE	1
(13)	QUICK–DISCONNECT TERMINAL	4
(14)	TERMINAL HOUSING CLAMP – HARDWARE INCLUDED	8
(15)	TUBULAR HEATER CLAMP – HARDWARE INCLUDED	AS REQ.
(16)	TUBULAR SNOWMELTER HEATING ELEMENT	2
(17)	1/2" X 3 1/2" L. LAG SCREW	4

SNOWMELTER HEATING ELEMENT

TURNOUT	SW. PT. LENGTH	ACTIVE LENGTH	OVERALL LENGTH	QTY. PER ASSY.
NO. 6	11'–0"	10'–0"	@ 11'–6"	2
NO. 8	16'–6"	15'–6"	@ 17'–0"	2
NO. 10	19'–6"	18'–6"	@ 21'–4"	2

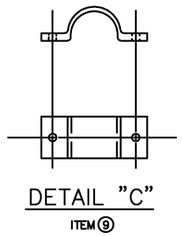

DETAIL "C"
ITEM (9)

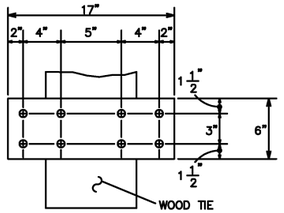

DETAIL "D"
ITEM (7)

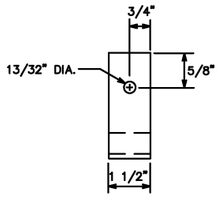

DETAIL "E"
ITEM (15)

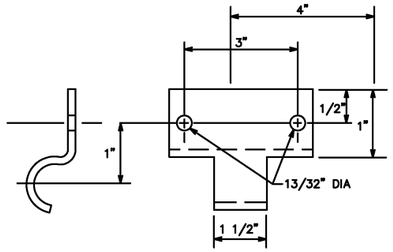

DETAIL "F"
ITEM (14)

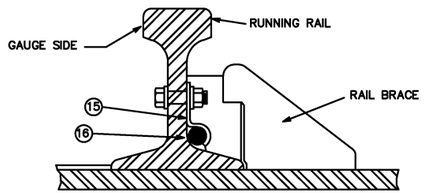

SECTION C–C

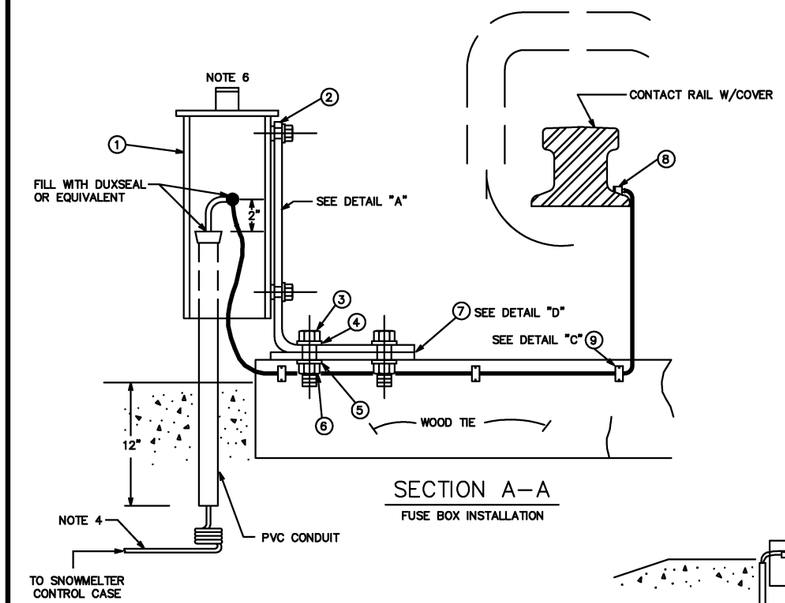

SECTION A–A
FUSE BOX INSTALLATION

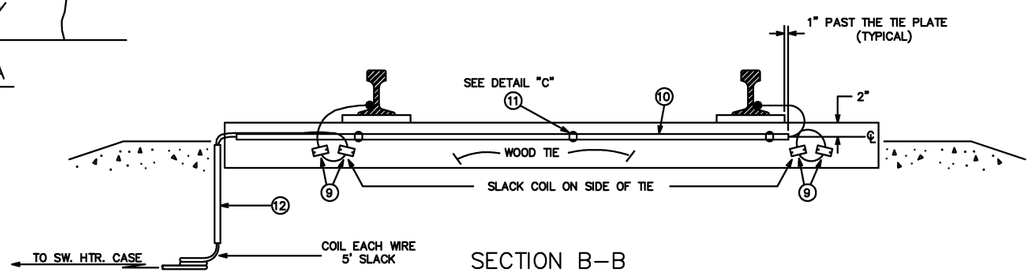

SECTION B–B

This Drawing Reflects a WMATA standard design approach. Project specific drawings must be developed by the Contractor which reflect this Design Philosophy

DESIGNED	GAH	2–00 DATE
DRAWN	JMR	2–00 DATE
CHECKED		DATE
APPROVED		DATE
UPDATED		DATE

REFERENCE DRAWINGS	
NUMBER	DESCRIPTION

REVISIONS		
DATE	BY	DESCRIPTION
08/2001	SYSP	Revised and issued by the Authority

WASHINGTON METROPOLITAN AREA TRANSIT AUTHORITY

DEPARTMENT OF TRANSIT SYSTEM DEVELOPMENT
OFFICE OF SYSTEMS

SUBMITTED _____ DATE

APPROVED DIRECTOR _____ May 3, 2001 DATE

TYPICAL SNOWMELTER LAYOUT

SCALE NONE

DRAWING NO. ST–TC–I–114

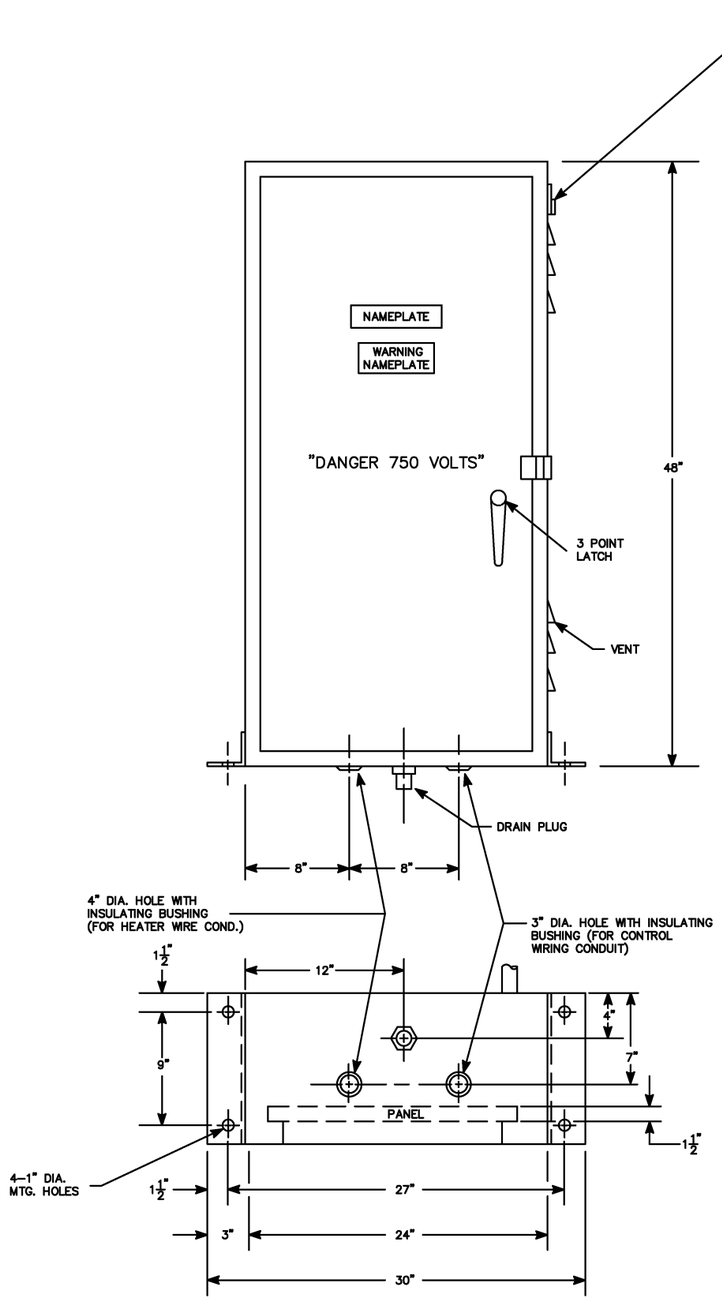

BOTTOM VIEW

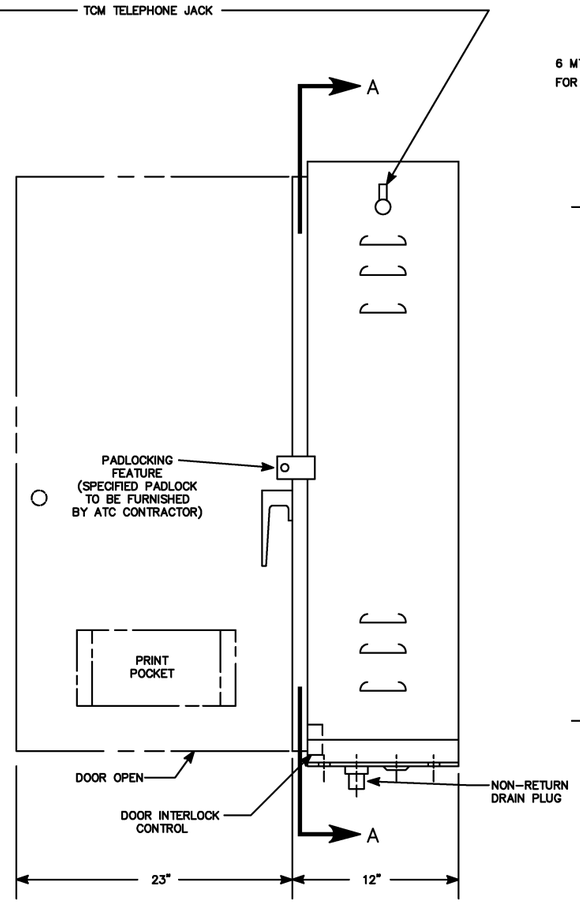

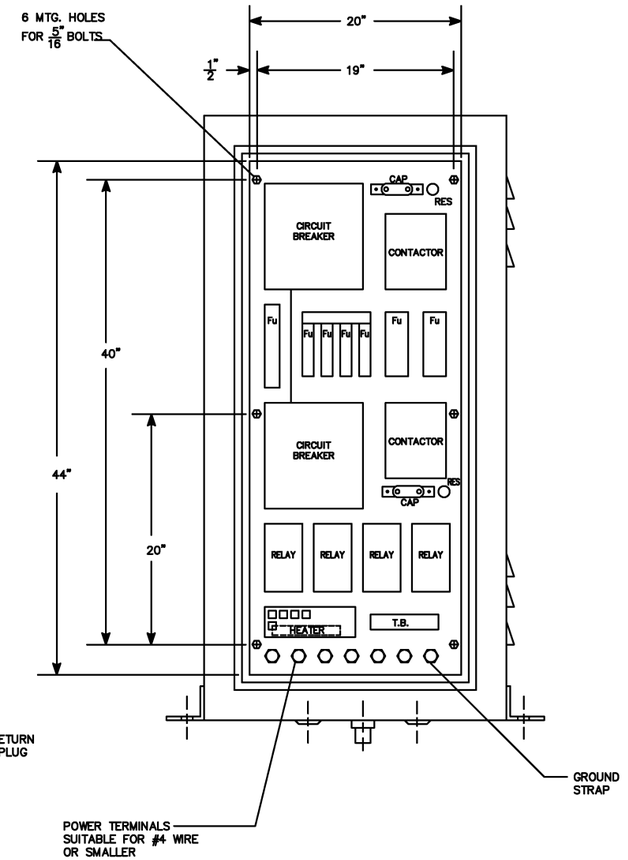

SECTION A–A

ENCLOSURE WITH DOOR REMOVED SHOWING PANEL LAYOUT

This Drawing Reflects a WMATA standard design approach. Project specific drawings must be developed by the Contractor which reflect this Design Philosophy

DESIGNED	GAH	2–00 DATE
DRAWN	JMR	2–00 DATE
CHECKED		DATE
APPROVED		DATE
UPDATED		DATE

REFERENCE DRAWINGS

NUMBER	DESCRIPTION

REVISIONS

DATE	BY	DESCRIPTION
08/2001	SYSP	Revised and issued by the Authority

WASHINGTON METROPOLITAN AREA TRANSIT AUTHORITY

DEPARTMENT OF TRANSIT SYSTEM DEVELOPMENT
OFFICE OF SYSTEMS

SUBMITTED _____ DATE

APPROVED _____ DIRECTOR May 3, 2001 DATE

TYPICAL SNOWMELTERS CONTROL CASE

SCALE	DRAWING NO.
NONE	ST–TC–I–115

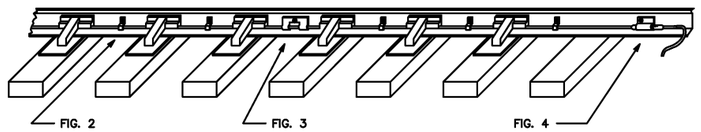

FIGURE 1 : TYPICAL SWITCH POINT HEATER INSTALLATION

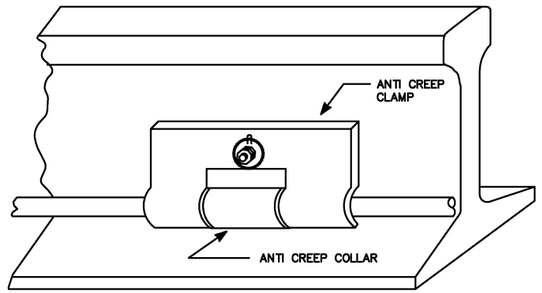

WHEN USING THE ANTI–CREEP CLAMP, IT SHALL BE MOUNTED FIRMLY AGAINST THE HEATER WITH THE "ARMS" BUTTED AGAINST EACH SIDE OF THE ANTI–CREEP COLLAR TO PREVENT LONGITUDINAL MOVEMENT. THE SLOT IN THE BOLT HOLE OF THIS CLAMP ALLOWS CORRECT VERTICAL POSITIONING.

FIGURE 3 : ANTI–CREEP CLAMP

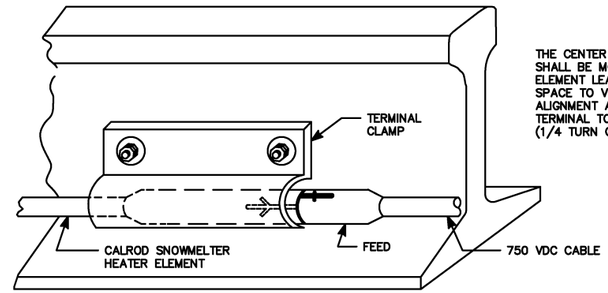

THE CENTER OF THE HEATER END CLAMP SHALL BE MOUNTED TOWARD THE HEATER ELEMENT LEAVING ADEQUATE SPACE TO VIEW THE "QUICK CONNECT" ALIGNMENT ARROWS AND TIGHTEN THE TERMINAL TO THE LOCK POSITION (1/4 TURN CLOCKWISE).

FIGURE 4 : TERMINAL CLAMP

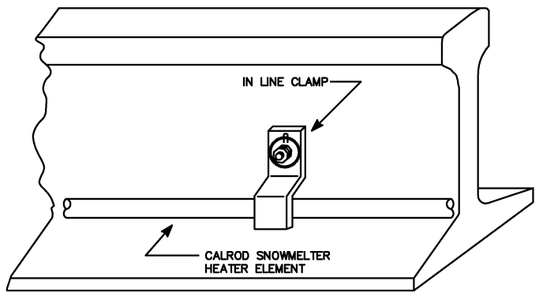

THE SLOT IN THIS CLAMP ALLOWS CORRECT VERTICAL POSITIONING. THE CLAMP SHALL BE ARRANGED TO ALLOW LONGITUDINAL MOVEMENT OF THE HEATER AS A RESULT OF EXPANSION AND CONTRACTION.

FIGURE 2 : IN–LINE CLAMP

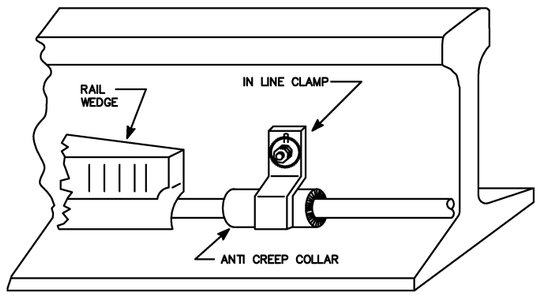

ON SOME HEATER ELEMENTS, THE ANTI–CREEP COLLAR MUST BE LOCATED NEAR A RAIL WEDGE, PREVENTING THE INSTALLATION OF THE ANTI–CREEP CLAMP. IN THIS CASE, AN IN LINE CLAMP SHALL BE FIRMLY MOUNTED AGAINST THE CENTER OF THE ANTI–CREEP COLLAR.

FIGURE 3A : ALTERNATE ANTI–CREEP CLAMP

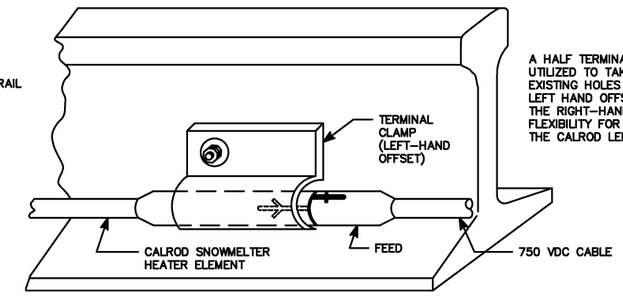

A HALF TERMINAL CLAMP MAY BE UTILIZED TO TAKE ADVANTAGE OF EXISTING HOLES IN THE RAIL. THE LEFT HAND OFFSET (PICTURED) OR THE RIGHT–HAND OFFSET ALLOWS FLEXIBILITY FOR VARIANCES IN THE CALROD LENGTH.

FIGURE 4A : ALTERNATE TERMINAL CLAMP

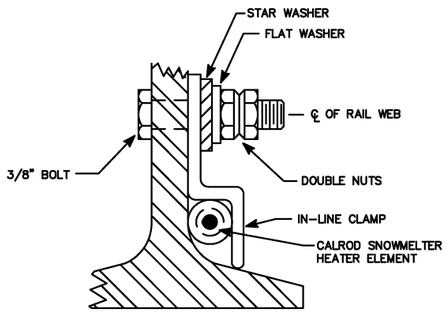

THE HEAD OF BOLT SHALL ALWAYS BE MOUNTED FACING THE SWITCH POINT.

FIGURE 2A : SIDE VIEW – IN–LINE CLAMP

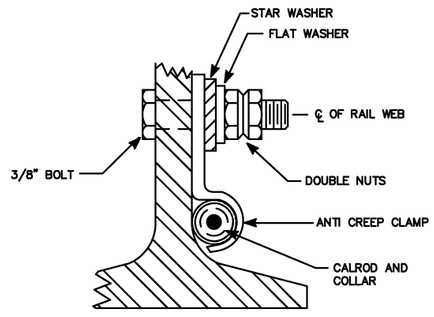

THE HEAD OF BOLT SHALL ALWAYS BE MOUNTED FACING THE SWITCH POINT.

FIGURE 3B : SIDE VIEW – ANTI–CREEP CLAMP

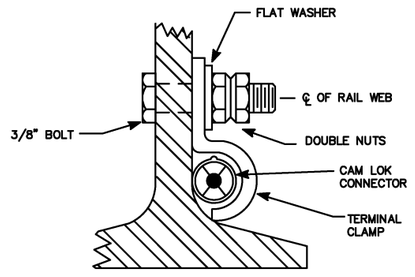

THE HEATER END CLAMP SHALL BE MOUNTED SO AS NOT TO INTERFERE WITH THE LONGITUDINAL MOVEMENT OF THE "QUICK CONNECT" TERMINAL. THIS CLAMP IS MEANT TO SERVE AS A GUIDEWAY, AND SHALL NEVER PINCH THE "CAM–LOK" CONNECTOR.

FIGURE 4B : SIDE VIEW – TERMINAL CLAMP

This Drawing Reflects a WMATA standard design approach. Project specific drawings must be developed by the Contractor which reflect this Design Philosophy

DESIGNED	GAH	2–00 DATE
DRAWN	JMR	2–00 DATE
CHECKED		DATE
APPROVED		DATE
UPDATED		DATE

REFERENCE DRAWINGS	
NUMBER	DESCRIPTION

REVISIONS		
DATE	BY	DESCRIPTION
08/2001	SYSP	Revised and issued by the Authority

WASHINGTON METROPOLITAN AREA TRANSIT AUTHORITY

DEPARTMENT OF TRANSIT SYSTEM DEVELOPMENT
OFFICE OF SYSTEMS

SUBMITTED _____ DATE

APPROVED _____ DIRECTOR May 3, 2001 DATE

TYPICAL SNOWMELTER HEATING ELEMENT MOUNTING DETAILS

SCALE: NONE

DRAWING NO.: ST–TC–I–116

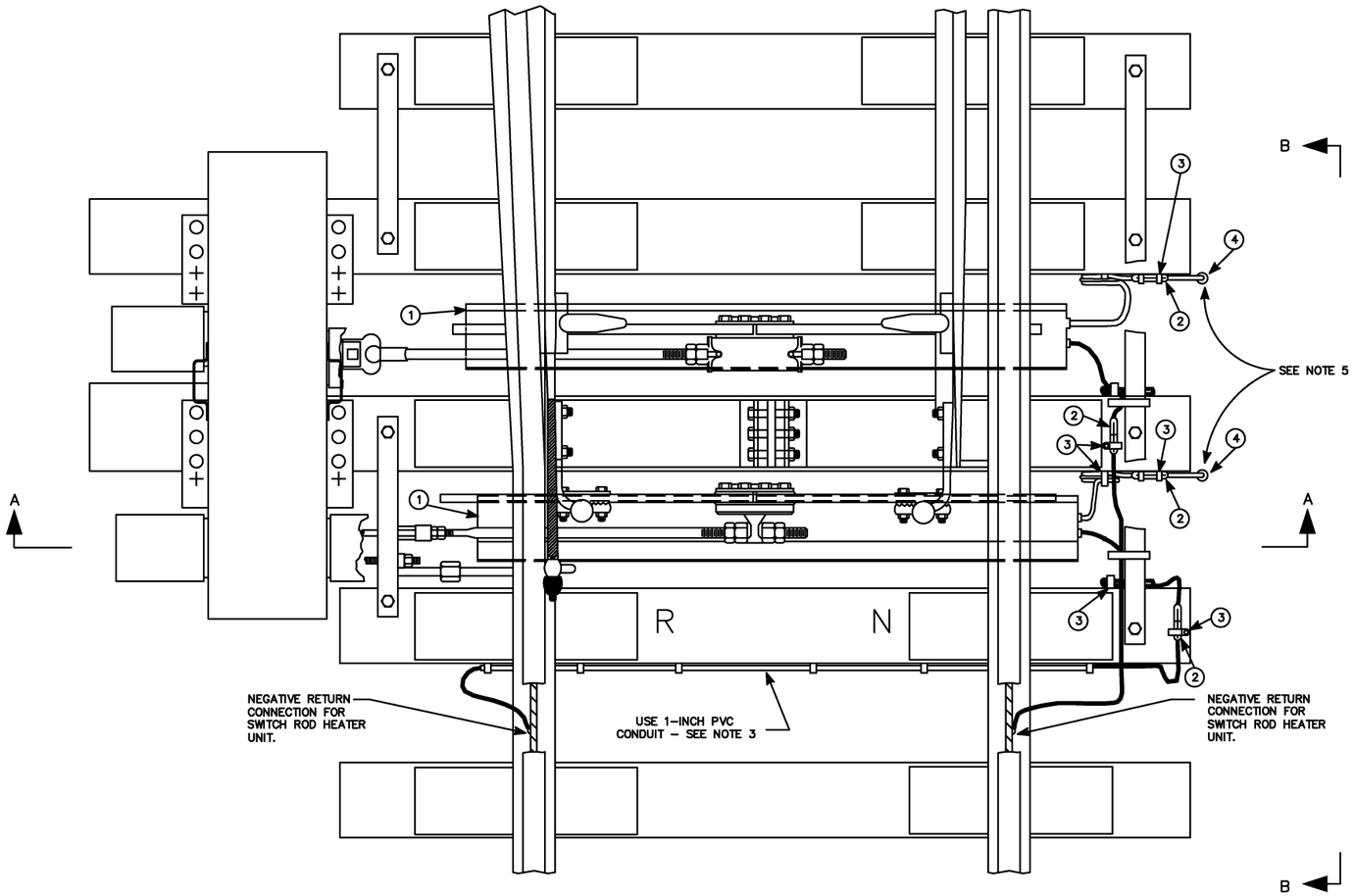

PLAN VIEW

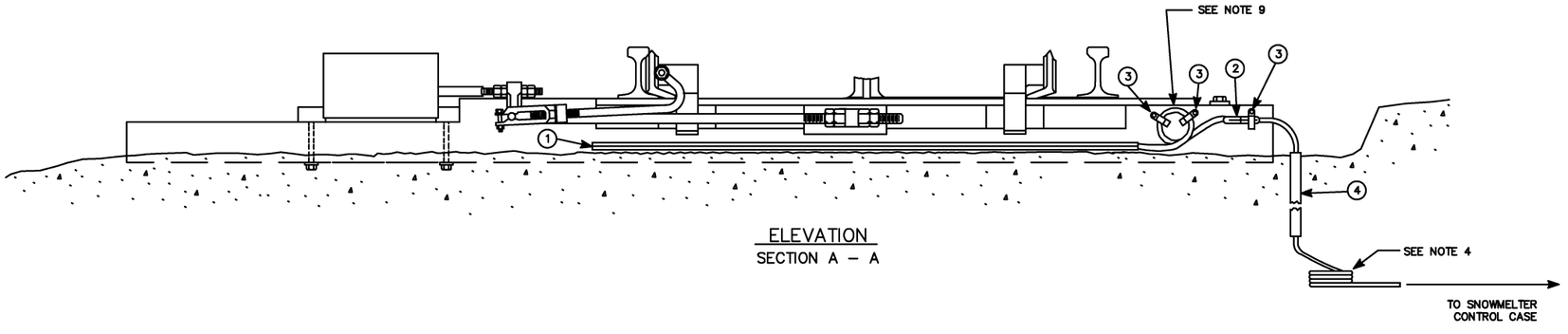

ELEVATION
SECTION A – A

NOTES:

1. CONTRACTOR SHALL REMOVE BALLAST TO BOTTOM OF EACH CRIB IN WHICH A SWITCH ROD HEATER UNIT IS TO BE INSTALLED.
2. PERMANENT (FEMALE) ENDS OF QUICK–DISCONNECT TERMINATIONS FOR #10 AWG CONTROL AND NEGATIVE–RETURN CABLES SHALL BE CLAMPED TO THE TIES ON THE ENDS AWAY FROM THE SWITCH MACHINE.
3. NEGATIVE–RETURN CABLES FOR THE SWITCH ROD HEATER UNITS SHALL BE ATTACHED TO THE NEUTRAL AXIS OF THE RUNNING RAILS BY MEANS OF EXOTHERMIC CONNECTIONS. ONE NEGATIVE–RETURN CABLE SHALL BE CONNECTED TO THE "NEAR" RUNNING RAIL, AND THE OTHER NEGATIVE – RETURN CABLE SHALL BE CONNECTED TO THE "FAR" RUNNING RAIL AS INDICATED, IN ORDER NOT TO UNBALANCE THE AUDIO FREQUENCY TRACK CIRCUIT. AS AN ALTERNATIVE, BOTH NEGATIVE–RETURN CABLES SHALL BE CONNECTED TO THE CENTER–TAP OF THE NEAREST IMPEDANCE BOND IN A MANNER APPROVED BY THE ENGINEER.
4. CONTRACTOR SHALL INSTALL AT LEAST 5 FEET OF SLACK CABLE IN A COIL AT THE BASE OF EACH CONTROL CABLE STUB–UP.
5. CONTROL CABLE FROM SNOWMELTER CONTROL CASE SHALL BE FIELD CONNECTED TO THE CONTROL–CABLE PIGTAIL FROM THE FEMALE PORTION OF THE QUICK–DISCONNECT TERMINATION BY MEANS OF A NICOPRESS OR OTHER APPROVED CONNECTOR. THIS CONNECTION SHALL BE INSULATED WITH HEAT–SHRINK TUBING OF 1000–VOLT RATING.
6. CONTROL–CABLE PIGTAILS SHALL BE RED CABLE. NEGATIVE–RETURN PIGTAILS SHALL BE BLACK CABLE.
7. HAZARDOUS VOLTAGES MAY BE PRESENT ON THE UNGROUNDED CASE OF THE SWITCH ROD HEATER UNIT. THE CONTRACTOR SHALL ADVISE HIS FIELD INSTALLATION PERSONNEL OF THIS POTENTIAL HAZARD AND BE RESPONSIBLE FOR THEIR SAFETY. THE CONTRACTOR SHALL ALSO INCLUDE A WARNING OF THIS POTENTIAL HAZARD ON ALL DRAWINGS SHOWING THIS UNIT AND SHALL INCLUDE THIS WARNING IN HIS OPERATIONS & MAINTENANCE MANUALS FOR THE SAFETY AND GUIDANCE OF THE AUTHORITY'S PERSONNEL.
8. THE CONTRACTOR SHALL INCLUDE A SECTION IN THE OPERATIONS & MAINTENANCE MANUAL OUTLINING PERIODIC TESTS TO BE MADE ON THE CASE OF THE SWITCH ROD HEATER UNITS TO DETECT A BREAKDOWN OF INSULATION BETWEEN THE CASE AND EITHER THE 750 V SUPPLY CABLE OR THE NEGATIVE–RETURN CABLE.
9. THE CONTRACTOR SHALL FORM THE EXCESS LENGTH OF EACH HEATER PIG–TAIL LEAD INTO A CIRCULAR COIL AND ATTACH IT VERTICALLY TO THE SIDE OF THE ADJACENT CROSSTIE USING AT LEAST TWO SCREW–MOUNTED POLYETHYLENE CABLE CLAMPS. CARE SHALL BE TAKEN NOT TO COMPRESS THE CABLE AGAINST ANY METAL PARTS OR SHARP EDGES.

EQUIPMENT

1. SWITCH ROD HEATER UNIT
2. QUICK–DISCONNECT TERMINATION (MALE HALF ON HEATER UNIT LEAD)
3. CLAMPING DEVICE, MIDLAND–ROSS CAT. NO. C–705, OR EQUAL
4. 1–INCH I.D. X 2–FOOT LONG HEAVY DUTY RUBBER HOSE.

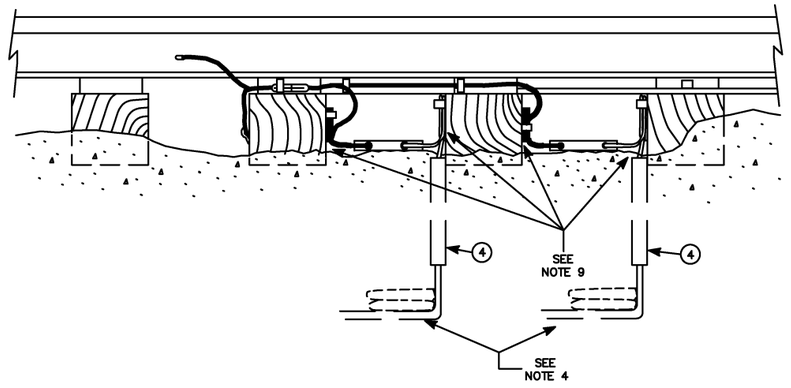

SIDE VIEW
SECTION B – B

This Drawing Reflects a WMATA standard design approach. Project specific drawings must be developed by the Contractor which reflect this Design Philosophy

DESIGNED	GAH	2–00 DATE
DRAWN	JMR	2–00 DATE
CHECKED		DATE
APPROVED		DATE
UPDATED		DATE

REFERENCE DRAWINGS

NUMBER	DESCRIPTION

REVISIONS

DATE	BY	DESCRIPTION
08/2001	SYSP	Revised and issued by the Authority

WASHINGTON METROPOLITAN AREA TRANSIT AUTHORITY

DEPARTMENT OF TRANSIT SYSTEM DEVELOPMENT
OFFICE OF SYSTEMS

SUBMITTED _____ DATE

APPROVED _____ DIRECTOR May 3, 2001 DATE

TYPICAL SWITCH ROD HEATER LAYOUT ON BALLAST

SCALE: NONE

DRAWING NO.: ST–TC–I–117

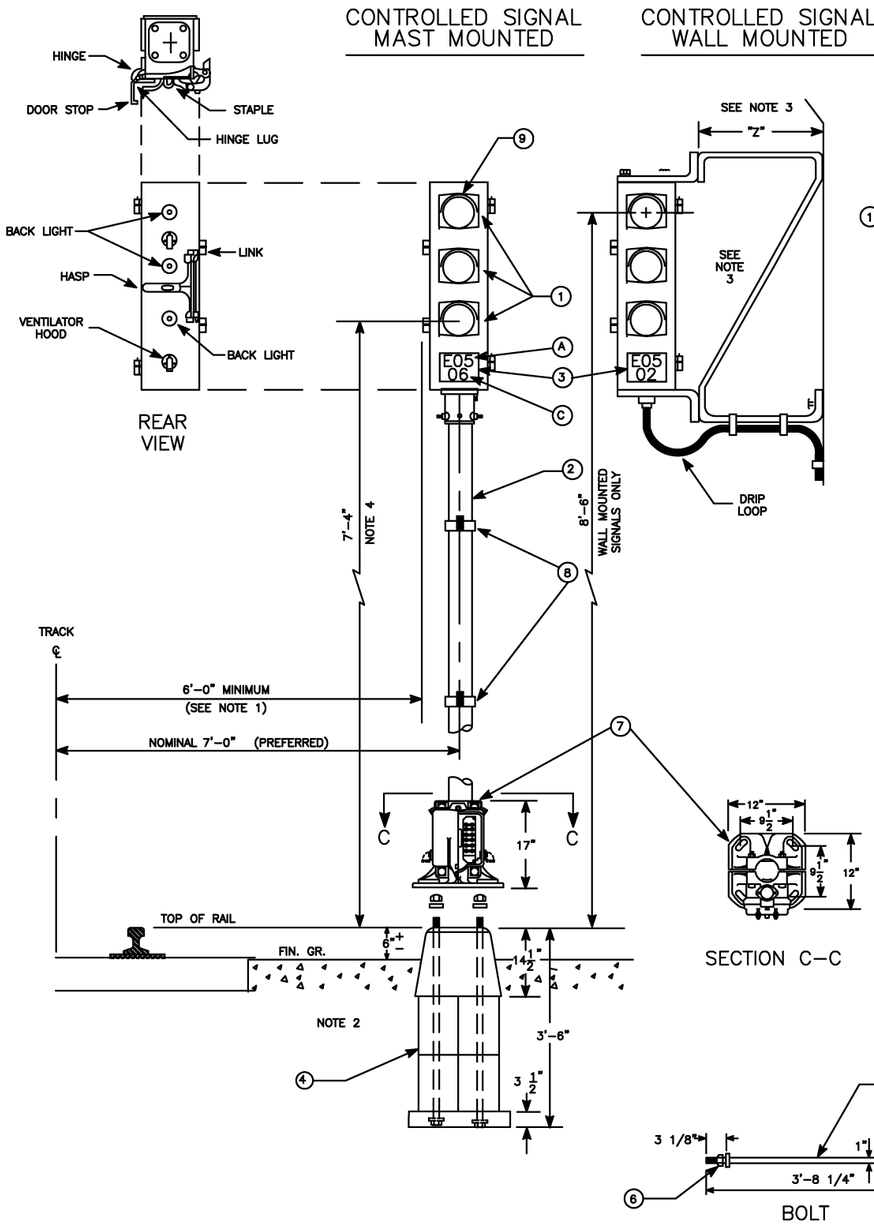

CONTROLLED SIGNAL MAST MOUNTED

SECTION C–C

CONTROLLED SIGNAL WALL MOUNTED

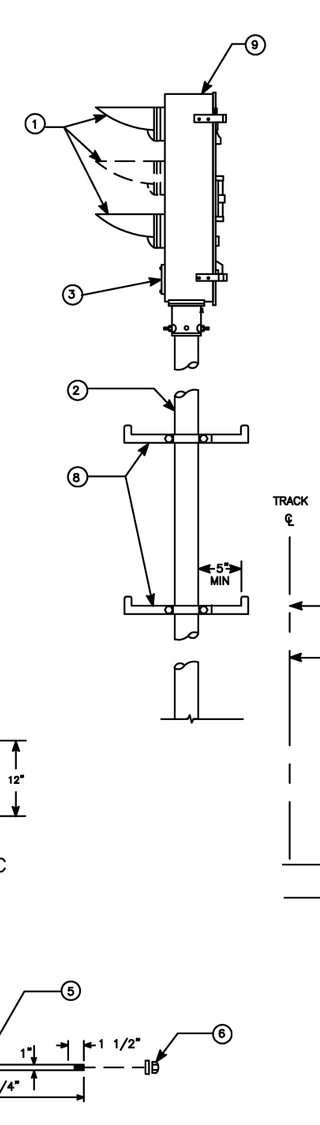

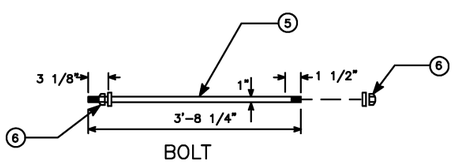

BOLT

MARKER SIGNAL

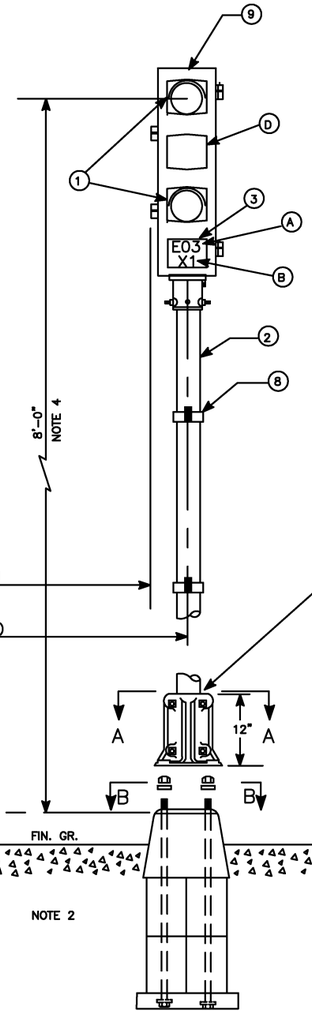

TYPICAL SIGNAL ASPECTS

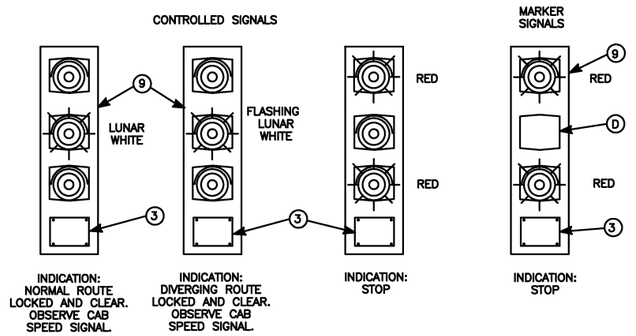

EQUIPMENT

- (A) ROUTE/LOCATION CODE.
- (B) LETTER "X" FOLLOWED BY TRACK NUMBER.
- (C) SIGNAL NUMBER.
- (D) BLANKING PLATE INSTEAD OF LENS ON MARKER SIGNALS ONLY.

- (1) NO HOODS REQUIRED ON SIGNALS MOUNTED IN TUNNEL.
- (2) 4" STEEL PIPE MAST, SEE SECTION 16965.
- (3) NUMBER PLATE, SEE SECTION 16965.
- (4) PRE–CAST CONCRETE FOUNDATION SEE SECTION 16975.
- (5) GALVANIZED 1" BOLT, 4 REQUIRED.
- (6) 1" NUT AND PLAIN WASHER, GALVANIZED, 8 REQUIRED
- (7) CAST IRON SPLIT BASE FOR 4" MAST. WITH OR WITHOUT JUNCTION BOX BASE, AS REQUIRED. SEE SECTION 16965.
- (8) SPLIT–CLAMP DOUBLE POLE STEPS. SEE NOTE 5.
- (9) SIGNAL HOUSINGS, LENSES, AND HOODS, PER SPECIFICATION SECTION 16965.

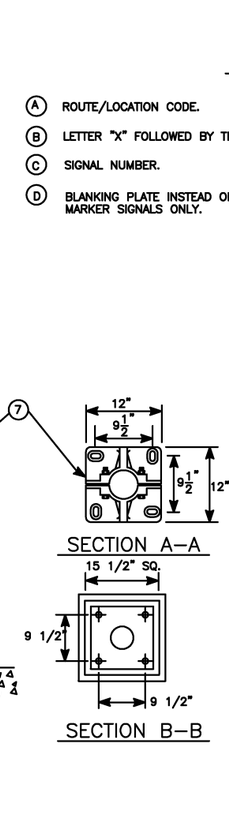

NOTES:

1. THE CONTRACTOR SHALL INSTALL WAYSIDE SIGNALS THE PREFERRED 7'–0" DISTANCE FROM CENTERLINE OF TRACK WHEREVER THIS CAN BE ACHIEVED IN COMPLIANCE WITH CLEARANCE AND SIGHTING REQUIREMENTS. WHERE NOMINAL (PREFERRED) INSTALLATION CANNOT BE ACHIEVED, MINIMUM CLEARANCE REQUIREMENTS SHALL PREVAIL. MINIMUM CLEARANCE SHOWN FOR LEVEL, TANGENT TRACK. CLEARANCE DISTANCE SHALL BE INCREASED AS NECESSARY TO COMPENSATE FOR TRANSIT VEHICLE OVERHANG ON NON–TANGENT TRACK OR IN APPROACH TO TURNOUTS, AND TRANSIT VEHICLE TILTING ON SUPERELEVATED TRACK. SEE DWGS. INF–CE–030 & INF–HDO–031.
2. FOR DIRECT FIXATION TO CONCRETE AT GRADE OR ON AERIAL STRUCTURE, CONTRACTOR SHALL INSTALL MAST MOUNTED SIGNALS ON CONCRETE SLAB OR CURB BY MEANS OF LEVELING BOLTS OR SPECIAL MOUNTING BRACKETS DESIGNED FOR THE SPECIFIC SITUATION ENCOUNTERED AS APPROVED BY THE DESIGNATED RESIDENT ENGINEER.
3. DIAGONAL BRACE REQUIRED IF DISTANCE "Z" EXCEEDS 4 INCHES. BRACE SHALL BE INSTALLED AS SHOWN, I.E., WITH THE DIAGONAL MEMBER IN TENSION.
4. SIGNAL (MAST) HEIGHT SHALL BE CHANGED WHERE NECESSARY TO OVERCOME SIGHTING PROBLEMS. THE CONTRACTOR SHALL DETERMINE WHERE SUCH CHANGES IN SIGNAL (MAST) HEIGHT ARE NECESSARY AND IMPLEMENT APPROVED CHANGES AT NO ADDITIONAL COST TO THE AUTHORITY.
5. • TOP STEP SHALL NOT BE LOWER THAN 5 FEET BELOW TOP OF SIGNAL.
   • BOTTOM STEP SHALL BE 1 FOOT ABOVE POLE BASE.
   • MAXIMUM DISTANCE BETWEEN STEPS SHALL NOT EXCEED 12 INCHES.
   • STEPS SHALL BE UNIFORMLY SPACED.

This Drawing Reflects a WMATA standard design approach. Project specific drawings must be developed by the Contractor which reflect this Design Philosophy

DESIGNED	GAH	2–00 DATE
DRAWN	JMR	2–00 DATE
CHECKED		DATE
APPROVED		DATE
UPDATED		DATE

REFERENCE DRAWINGS

NUMBER	DESCRIPTION

REVISIONS

DATE	BY	DESCRIPTION
08/2001	SYSP	Revised and issued by the Authority

WASHINGTON METROPOLITAN AREA TRANSIT AUTHORITY

DEPARTMENT OF TRANSIT SYSTEM DEVELOPMENT
OFFICE OF SYSTEMS

SUBMITTED _____ DATE

APPROVED _____ DIRECTOR May 3, 2001 DATE

TYPICAL SIGNAL LAYOUTS

SCALE: NONE

DRAWING NO.: ST–TC–I–121

NOTES:

1. NOMINAL MAXIMUM LIMIT OF MOUNTING SHOWN APPLIES ONLY FOR LEVEL, TANGENT TRACK IN AREAS NOT SUBJECT TO TRANSIT VEHICLE OVERHANG DUE TO ADJACENT CURVATURE OR SPECIAL TRACKWORK. CLEARANCE DISTANCE SHALL BE INCREASED AS NECESSARY TO COMPENSATE FOR TRANSIT VEHICLE OVERHANG ON NON-TANGENT TRACK OR IN OR ADJACENT TO TURNOUTS OR CROSSOVERS, AND TRANSIT VEHICLE TILTING ON SUPERELEVATED TRACK. SEE DWG. G-027.
2. CONTRACTOR SHALL MOUNT PUSHBUTTON LAYOUTS IN SUCH A MANNER THAT THE PUSHBUTTONS CAN BE EASILY REACHED BY THE TRANSIT CAR OPERATOR WHEN THE CAR IS STOPPED AT THE ASSOCIATED SIGNAL, BUT ALSO IN SUCH A MANNER THAT THE PUSHBUTTON LAYOUT DOES NOT INTERFERE WITH THE OPERATOR'S VIEW OF THE ASSOCIATED SIGNAL AS THE CAR APPROACHES.
3. CONTRACTOR SHALL MOUNT PUSHBUTTON LAYOUTS IN SUCH A MANNER THAT THEY DO NOT INTERFERE WITH ACCESS TO ROOMS OR EQUIPMENT, AND DO NOT CONSTITUTE A SAFETY HAZARD WHEN MOUNTED ABOVE SAFETY WALKS.
4. TWO POLE STEPS SHALL BE PROVIDED FOR EACH MAST-MOUNTED PUSHBUTTON LAYOUT AS INDICATED. SEE SECTION 16966.

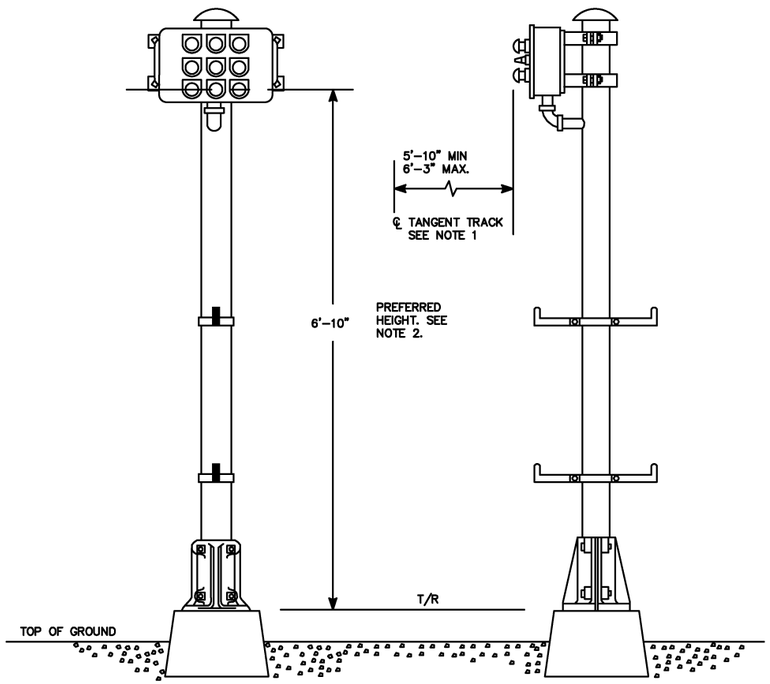

WAYSIDE PUSHBUTTON-MAST MOUNTED

NOTE: AS AN ALTERNATIVE, THE PUSHBUTTON UNIT MAY BE MOUNTED ON THE TOP OF A SHORTER MAST, BUT THE POLE STEPS MAY HAVE TO BE TURNED 90-DEGREES IN ORDER TO MAINTAIN MINIMUM CLEARANCE NECESSARY.

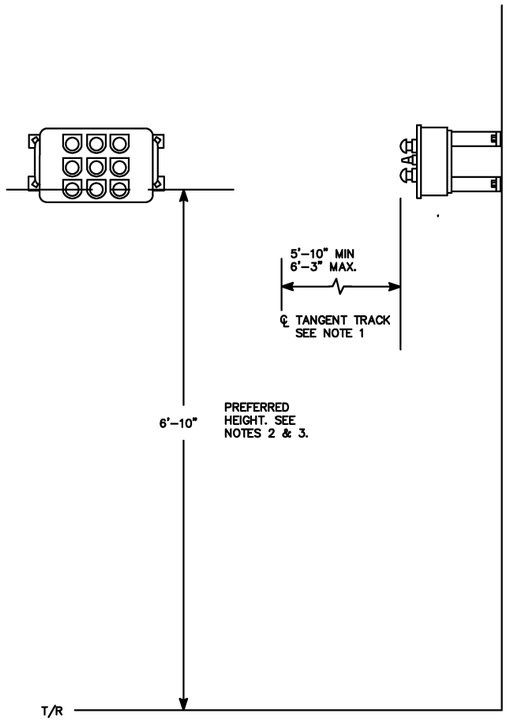

WAYSIDE PUSHBUTTON-WALL MOUNTED

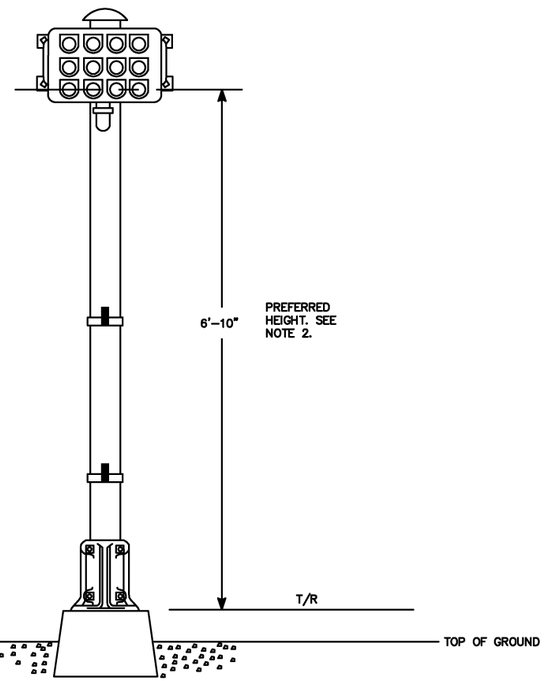

WAYSIDE PUSHBUTTON-MAST MOUNTED

FOUR-ROUTE UNIT

This Drawing Reflects a WMATA standard design approach. Project specific drawings must be developed by the Contractor which reflect this Design Philosophy

DESIGNED GAH	2-00 DATE	
DRAWN JMR	2-00 DATE	
CHECKED	DATE	
APPROVED	DATE	
UPDATED	DATE	

REFERENCE DRAWINGS	
NUMBER	DESCRIPTION

REVISIONS		
DATE	BY	DESCRIPTION
08/2001	SYSP	Revised and issued by the Authority

WASHINGTON METROPOLITAN AREA TRANSIT AUTHORITY

DEPARTMENT OF TRANSIT SYSTEM DEVELOPMENT
OFFICE OF SYSTEMS

SUBMITTED _____ DATE

APPROVED DIRECTOR _____ May 3, 2001 DATE

TYPICAL WAYSIDE PUSHBUTTON LAYOUT

SCALE NONE

DRAWING NO. ST-TC-I-123

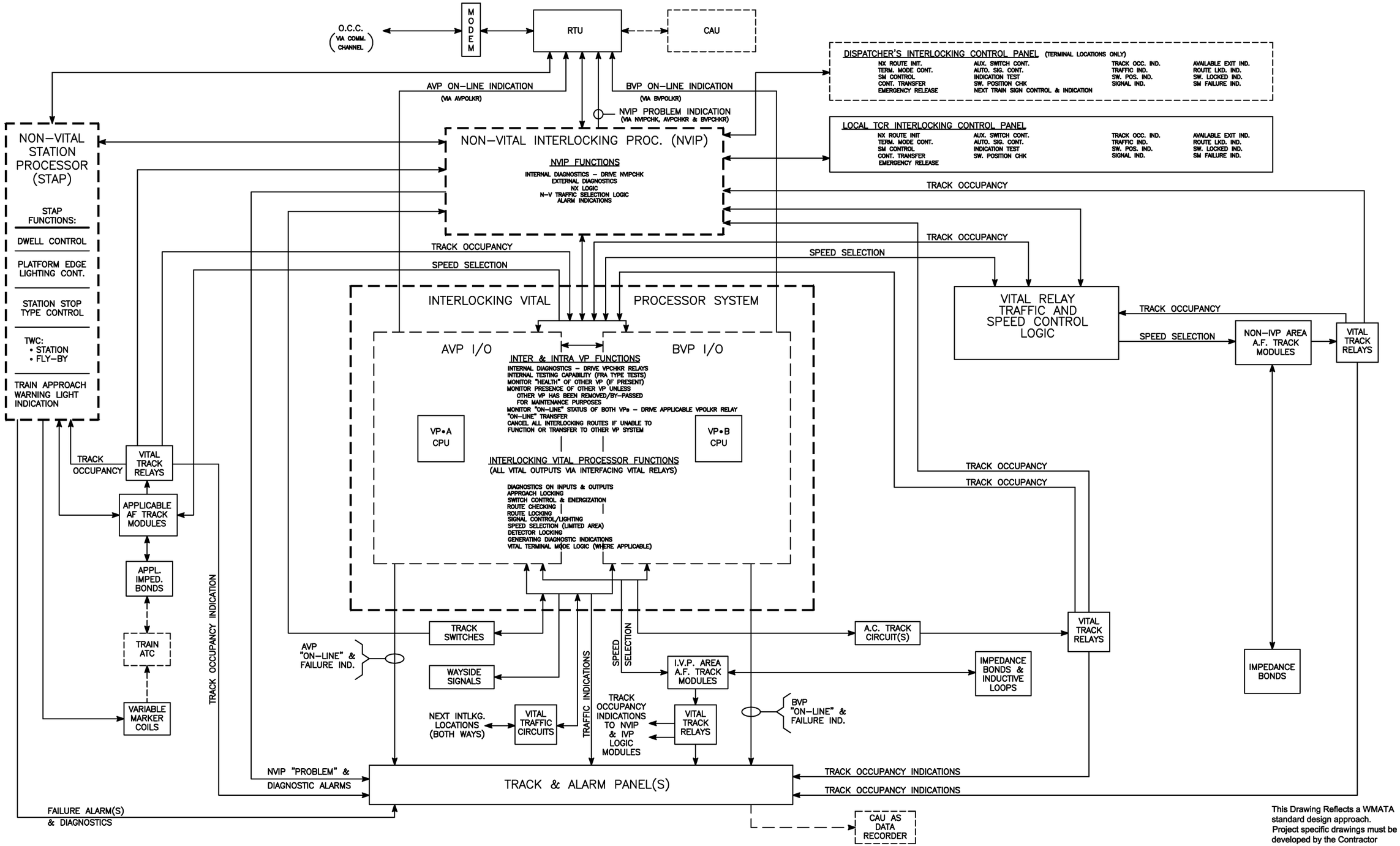

This Drawing Reflects a WMATA standard design approach. Project specific drawings must be developed by the Contractor which reflect this Design Philosophy

DESIGNED GAH 6-00 DATE
DRAWN JMR 6-00 DATE
CHECKED DATE
APPROVED DATE
UPDATED DATE

REFERENCE DRAWINGS

NUMBER	DESCRIPTION

REVISIONS

DATE	BY	DESCRIPTION
08/2001	SYSP	Revised and issued by the Authority

WASHINGTON METROPOLITAN AREA TRANSIT AUTHORITY

DEPARTMENT OF TRANSIT SYSTEM DEVELOPMENT
OFFICE OF SYSTEMS

SUBMITTED _____ DATE

APPROVED _____ DIRECTOR May 3, 2001 DATE

INTERLOCKING VITAL PROCESSOR SYSTEM FUNCTIONAL BLOCK DIAGRAM

SCALE: NONE

DRAWING NO.: ST–TC–I–131

WMATA

INFORMATION ONLY DRAWINGS

This Drawing Reflects a WMATA standard design approach. Project specific drawings must be developed by the Contractor which reflect this Design Philosophy

DESIGNED GAH 6-00 DATE
DRAWN JMR 6-00 DATE
CHECKED ____ DATE
APPROVED ____ DATE
UPDATED ____ DATE

REFERENCE DRAWINGS

NUMBER	DESCRIPTION

REVISIONS

DATE	BY	DESCRIPTION
08/2001	SYSP	Revised and issued by the Authority

WASHINGTON METROPOLITAN AREA TRANSIT AUTHORITY

DEPARTMENT OF TRANSIT SYSTEM DEVELOPMENT
OFFICE OF SYSTEMS

SUBMITTED ____ DATE

APPROVED DIRECTOR May 3, 2001 DATE

INFORAMTION DRAWINGS

SCALE NONE

DRAWING NO. ST-TC-INF-000

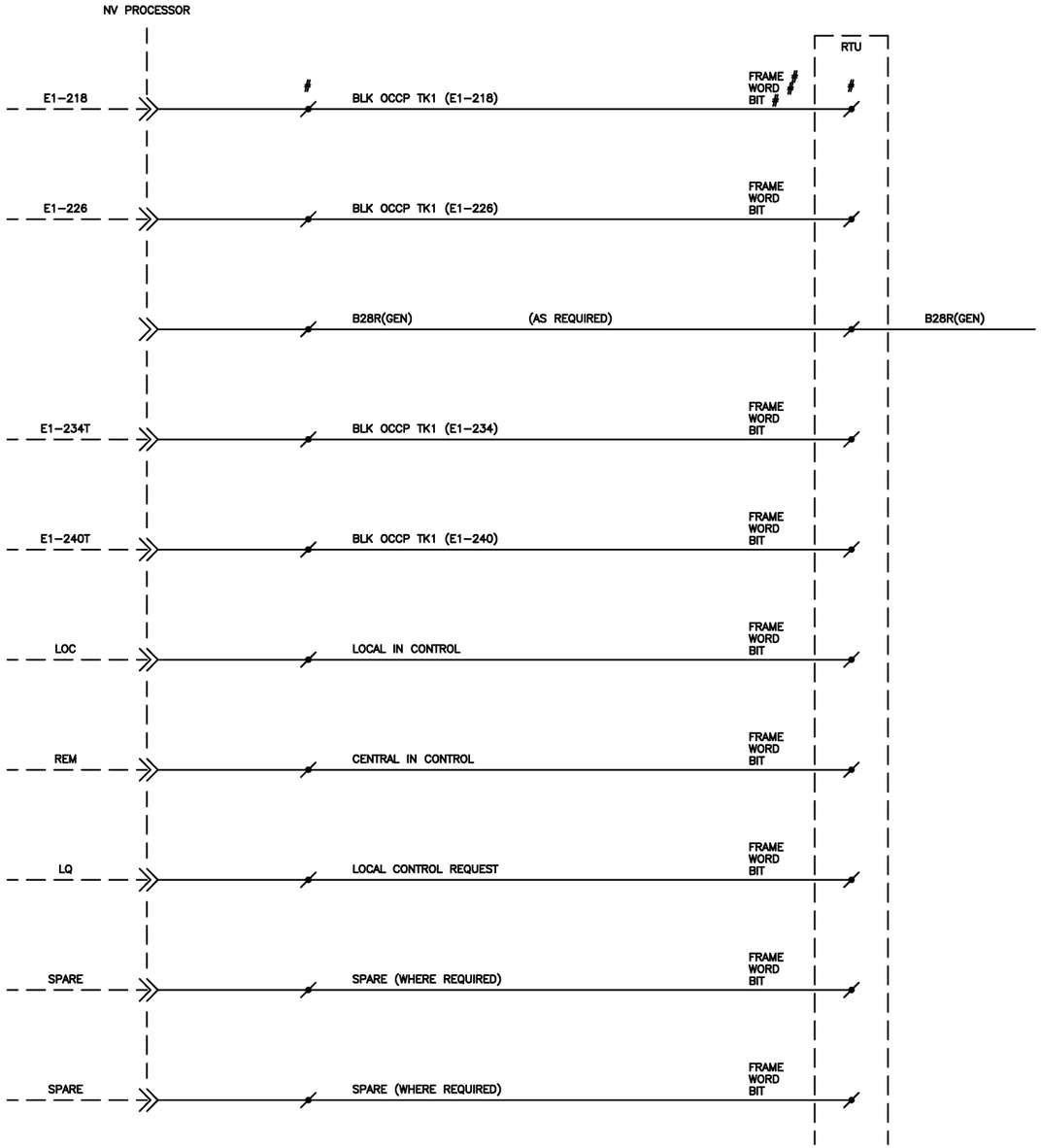

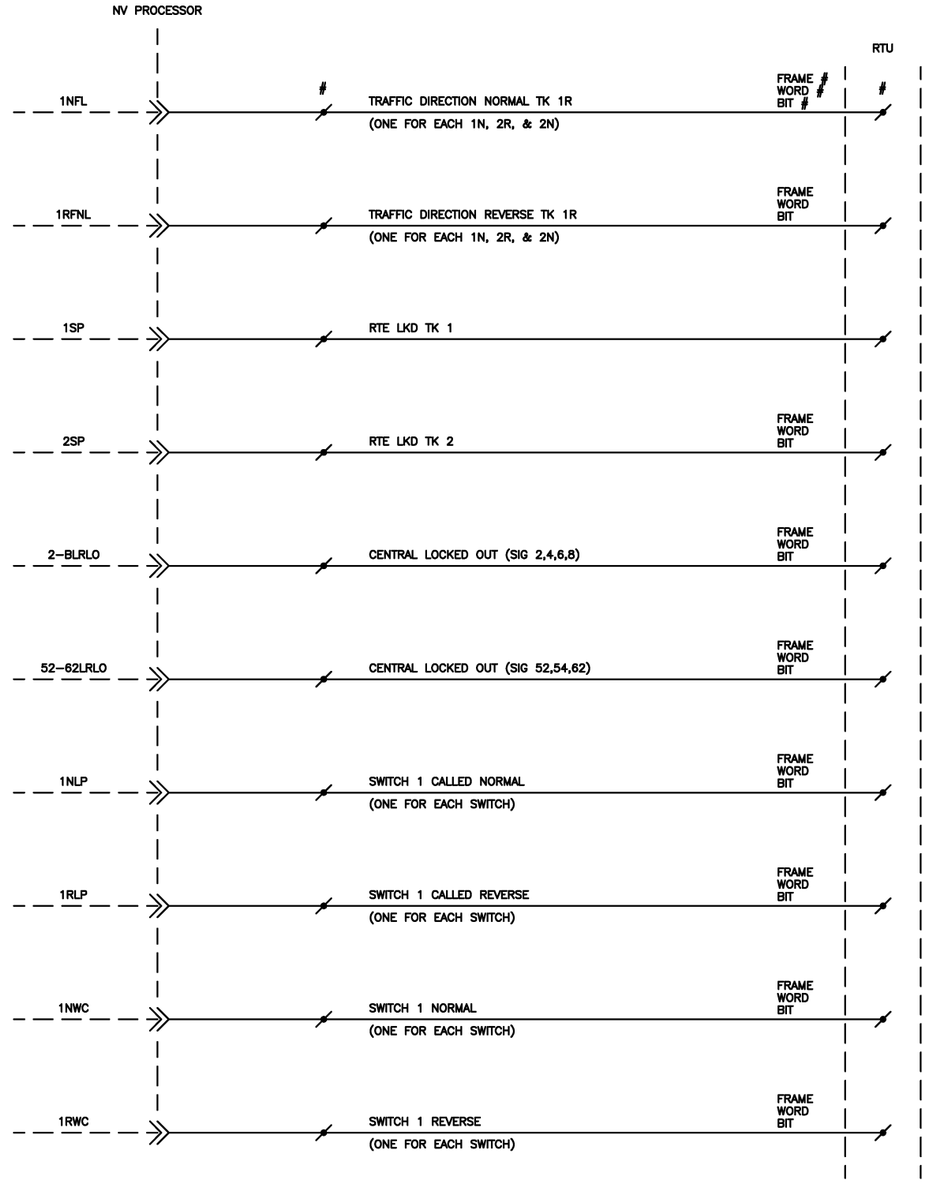

NOTES:

1. INDICATION NAMES MUST AGREE WITH RTU SCAN SHEETS.
2. # ALL TERMINATIONS AND DETAILS MUST BE PROVIDED BY THE CONTRACTOR.

ALL WIRES #20 UNLESS NOTED.

This Drawing Reflects a WMATA standard design approach. Project specific drawings must be developed by the Contractor which reflect this Design Philosophy

DESIGNED GAH 11–00 DATE
DRAWN JMR 11–00 DATE
CHECKED ____ DATE
APPROVED ____ DATE
UPDATED ____ DATE

REFERENCE DRAWINGS

NUMBER	DESCRIPTION

REVISIONS

DATE	BY	DESCRIPTION
08/2001	SYSP	Revised and issued by the Authority

WASHINGTON METROPOLITAN AREA TRANSIT AUTHORITY

DEPARTMENT OF TRANSIT SYSTEM DEVELOPMENT
OFFICE OF SYSTEMS

SUBMITTED ____ DATE

APPROVED ____ DIRECTOR May 3, 2001 DATE

REMOTE TERMINAL UNIT TO TYPICAL NON–VITAL PROCESSOR OUTPUTS

SCALE NONE

DRAWING NO. ST–TC–NVP–001

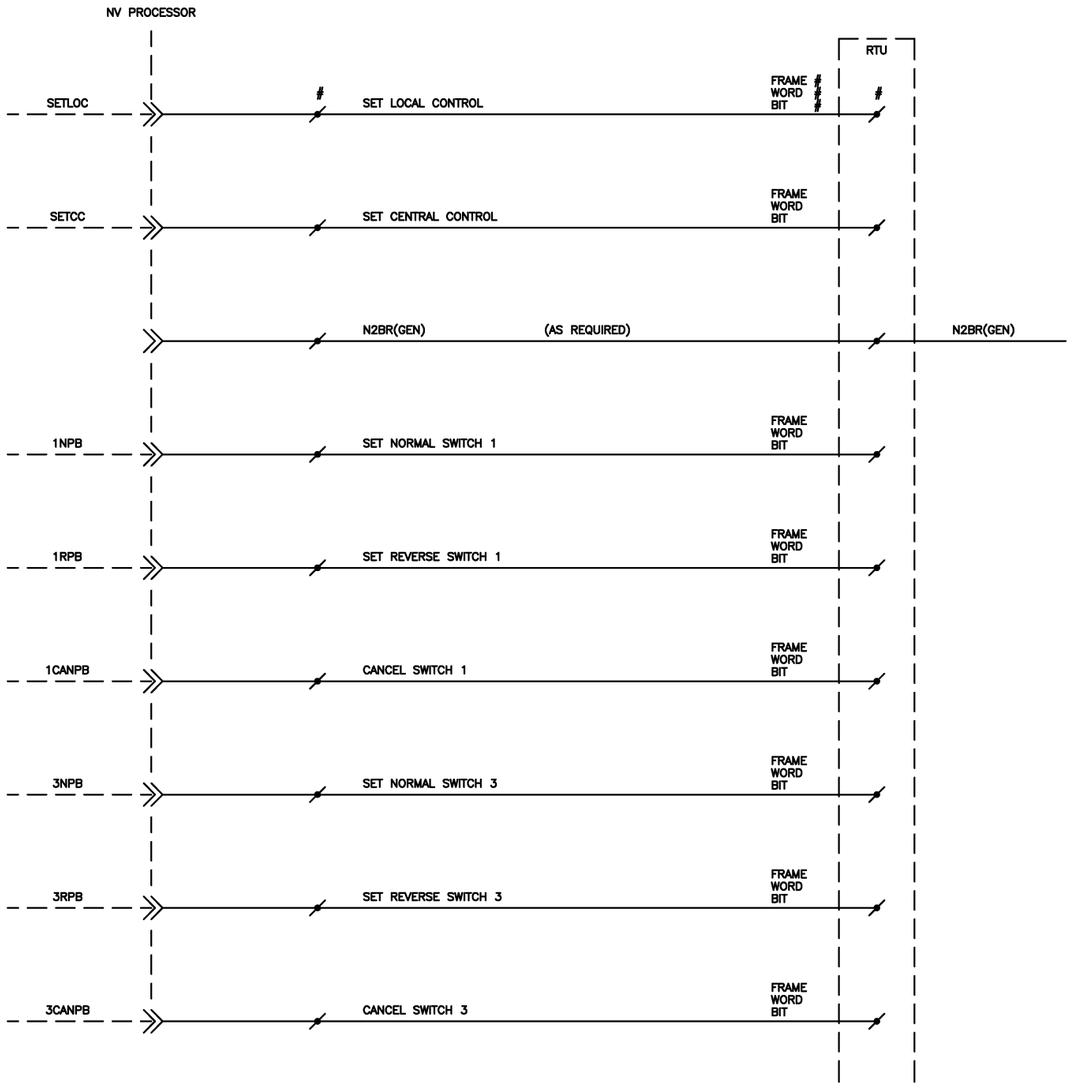

NOTES:
1. RTU NAMES MUST AGREE WITH RTU SCAN SHEETS
2. # ALL TERMINATIONS AND DETAILS MUST BE PROVIDED BY THE CONTRACTOR

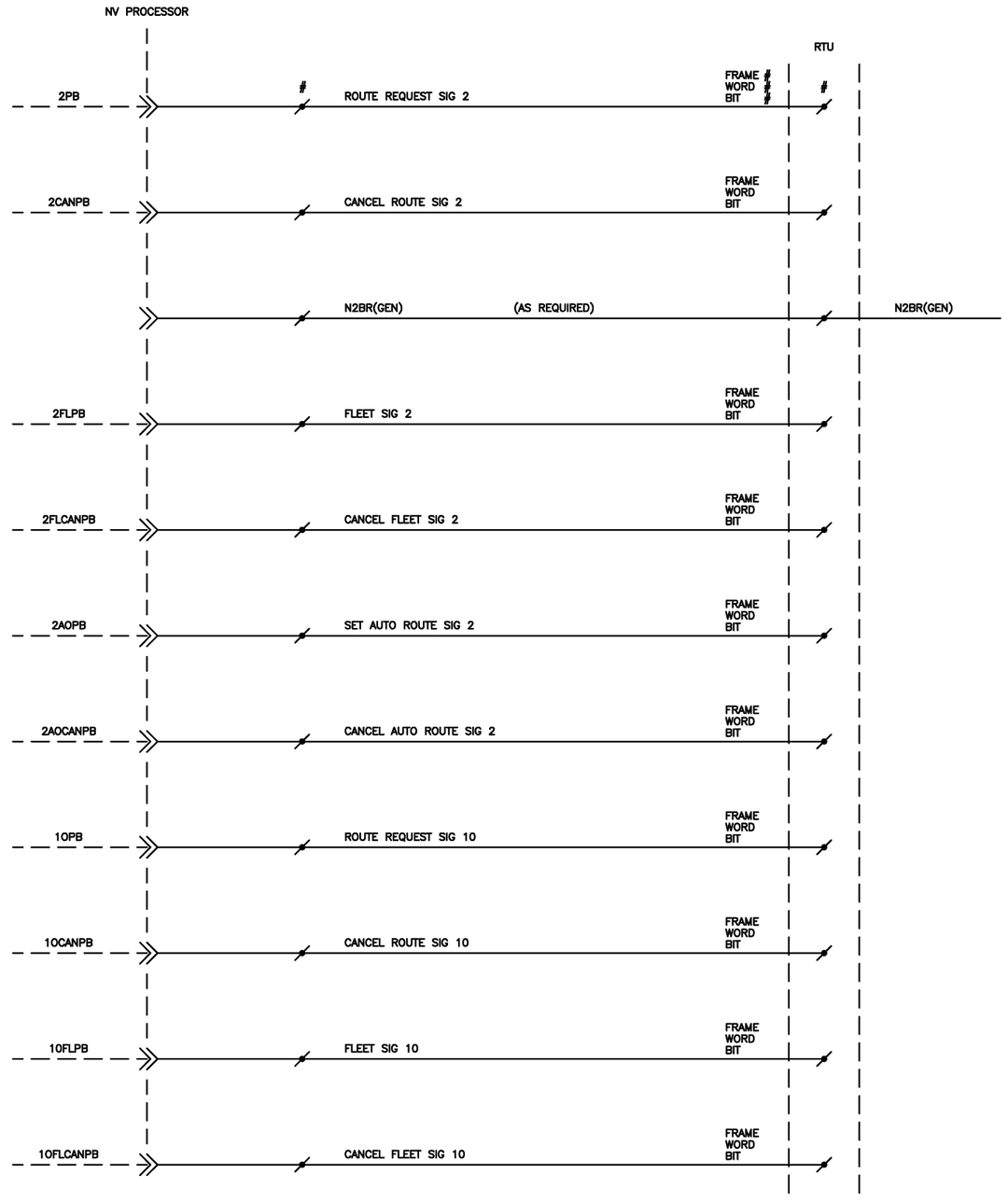

This Drawing Reflects a WMATA standard design approach. Project specific drawings must be developed by the Contractor which reflect this Design Philosophy

DESIGNED GAH 11-00 DATE
DRAWN JMR 11-00 DATE
CHECKED ____ DATE
APPROVED ____ DATE
UPDATED ____ DATE

REFERENCE DRAWINGS

NUMBER	DESCRIPTION

REVISIONS

DATE	BY	DESCRIPTION
08/2001	SYSP	Revised and issued by the Authority

WASHINGTON METROPOLITAN AREA TRANSIT AUTHORITY

DEPARTMENT OF TRANSIT SYSTEM DEVELOPMENT
OFFICE OF SYSTEMS

SUBMITTED ____ DATE

APPROVED DIRECTOR ____ May 3, 2001 DATE

REMOTE TERMINAL UNIT TYPICAL NON-VITAL PROCESSOR INPUTS

SCALE NONE

DRAWING NO. ST-TC-NVP-002

WMATA

TYPICAL POWER DRAWINGS

BOOK OF PLANS

This Drawing Reflects a WMATA standard design approach. Project specific drawings must be developed by the Contractor which reflect this Design Philosophy

DESIGNED GAH 6-00 DATE
DRAWN JMR 6-00 DATE
CHECKED DATE
APPROVED DATE
UPDATED DATE

REFERENCE DRAWINGS	
NUMBER	DESCRIPTION

REVISIONS		
DATE	BY	DESCRIPTION
08/2001	SYSP	Revised and issued by the Authority

WASHINGTON METROPOLITAN AREA TRANSIT AUTHORITY

DEPARTMENT OF TRANSIT SYSTEM DEVELOPMENT
OFFICE OF SYSTEMS

SUBMITTED DATE

APPROVED DIRECTOR May 3, 2001 DATE

TYPICAL POWER DRAWINGS

SCALE NONE

DRAWING NO. ST-TC-P-000

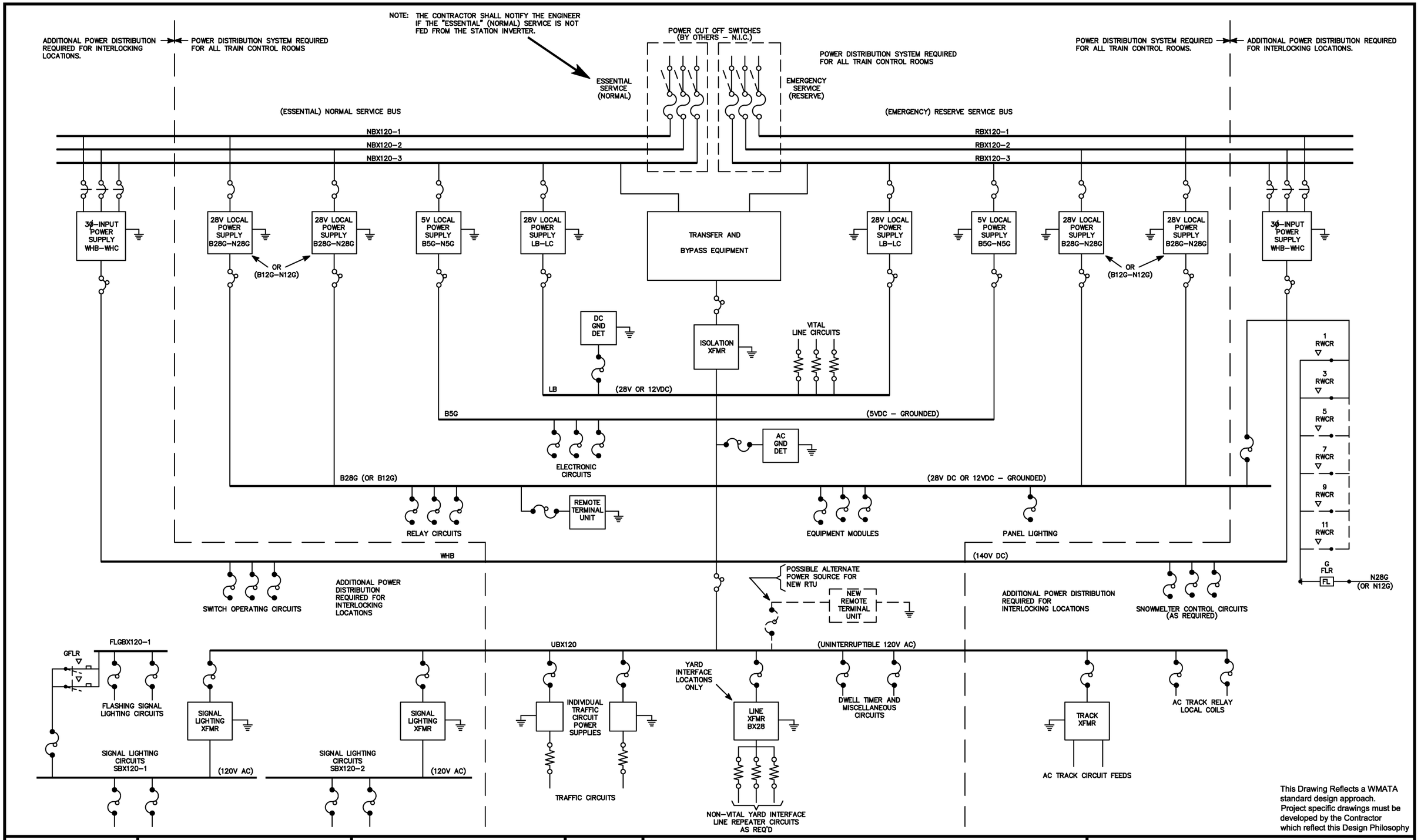

This Drawing Reflects a WMATA standard design approach. Project specific drawings must be developed by the Contractor which reflect this Design Philosophy

DESIGNED GAH	6–00 DATE	
DRAWN JMR	6–00 DATE	
CHECKED	DATE	
APPROVED	DATE	
UPDATED	DATE	

REFERENCE DRAWINGS

NUMBER	DESCRIPTION

REVISIONS

DATE	BY	DESCRIPTION
08/2001	SYSP	Revised and issued by the Authority

WASHINGTON METROPOLITAN AREA TRANSIT AUTHORITY

DEPARTMENT OF TRANSIT SYSTEM DEVELOPMENT
OFFICE OF SYSTEMS

SUBMITTED _____ DATE

APPROVED _____ DIRECTOR May 3, 2001 DATE

TYPICAL POWER DISTRIBUTION SCHEMATIC FOR TCRS

SCALE NONE

DRAWING NO. ST–TC–P–001

NOTES:

1. TWO IDENTICAL SUPPLIES FROM PHASE 1 & 2 OR ONE 3-PHASE INPUT SUPPLY.
2. CONNECT TCR PRIME GROUND BUS BAR TO CABLE FROM POWER SOURCE GROUND IN AC SVC ROOM. THIS CABLE PROVIDED BY OTHERS.
3. ⏚ CASE GROUNDED TO RACK.
4. ONE 3-PHASE INPUT SUPPLY OR THREE SINGLE-PHASE INPUT SUPPLIES, ONE FED FROM EACH INPUT PHASE.
5. THE CONTRACTOR SHALL NOTIFY THE ENGINEER IF THE "ESSENTIAL" (NORMAL) SOURCE IS NOT FED FROM THE STATION INVERTER.

POWER CUTOFF SWITCHES (BY OTHERS – N.I.C.)

NORMAL SOURCE (ESSENTIAL) 3ϕ 208Y/120V NOTE 5

RESERVE SOURCE (EMERGENCY) 3ϕ 208Y/120V

ADDITIONAL D.C. POWER DISTRIBUTION FOR INTER-LOCKING LOCATIONS

TYPICAL POWER DISTRIBUTION SYSTEM FOR ALL TRAIN CONTROL ROOMS

NORMAL SERVICE BUS

NBX 120-1
NBX 120-2
NBX 120-3
NGND

"A" "B"

TO TRANSFER AND BYPASS EQUIPMENT SEE DRAWING NO. ATCJ&B-P-003

TEST GND 1
TEST GND 2
} TO STATION GROUND IN A.C. SVC ROOM
GND TO TCR PRIME GROUND BUS

DC GND DET.

TO LINE CIRCUITS AS REQUIRED

TYPICAL POWER DISTRIBUTION SYSTEM FOR ALL TRAIN CONTROL ROOMS

RESERVE SERVICE BUS

RBX 120-1
RBX 120-2
RBX 120-3
RGND

ADDITIONAL D.C. POWER DISTRIBUTION FOR INTER-LOCKING LOCATIONS

SEE NOTE 4

140V DC NORMAL SWITCH & HEATER POWER SUPPLY NWHB-NWHC

SEE NOTE 1

28V OR 12V GROUNDED NORMAL SUPPLY NB28G-NN28G OR NB12G-NN12G

28V OR 12V GROUNDED NORMAL SUPPLY NB28G-NN28G OR NB12G-NN12G

5V (LOGIC) GROUNDED NORMAL SUPPLY NB5G-NN5G

LINE 28V-2A NORMAL SUPPLY NLB-NLC

NLB NLC LC BUS LB BUS RLB RLC

LINE 28V-2A RESERVE SUPPLY RLB-RLC

5V (LOGIC) GROUNDED RESERVE SUPPLY RB5G-RN5G

SEE NOTE 1

28V OR 12V GROUNDED RESERVE SUPPLY RB28G-RN28G OR RB12G-RN12G

28V OR 12V GROUNDED RESERVE SUPPLY RB28G-RN28G OR RB12G-RN12G

SEE NOTE 4

140V DC RESERVE SWITCH & HEATER POWER SUPPLY RWHB-RWHC

NB5G NN5G B5G BUS

RB5G RN5G N5G BUS

TO ELECTRONIC CIRCUITS AS REQUIRED

GROUND DET & RACK BUS BAR CONNECTIONS AS REQUIRED

NB28G-1 (OR NB12G-1) NN28G-1 (OR NN12G-1)

NB28G-2 (OR NB12G-2) NN28G-2 (OR NN12G-2)

RB28G-1 (OR RB12G-1) RN28G-1 (OR RN12G-1)

RB28G-2 (OR RB12G-2) RN28G-2 (OR RN12G-2)

SEE NOTE 2

TRAIN CONTROL ROOM PRIME GROUND BUS BAR

B28G (OR B12G) BUS

N28G (OR N12G) BUS

TO RELAY CIRCUITS AS REQUIRED

PANEL LIGHTING

TO EQUIPMENT MODULES AS REQUIRED

RTU

NWHB NWHC WHB BUS WHC BUS

RWHB RWHC

SWITCH OPERATING CKTS AS REQUIRED

SNOWMELTER CONTROL CKTS AS REQUIRED FOR OUTDOOR INTERLOCKINGS ONLY

GFLR FL

1 RWCR
3 RWCR
5 RWCR
7 RWCR

ADDITIONAL RWCR CONTACTS AS NECESSARY

This Drawing Reflects a WMATA standard design approach. Project specific drawings must be developed by the Contractor which reflect this Design Philosophy

DESIGNED	GAH	8-00 DATE
DRAWN	JMR	8-00 DATE
CHECKED		DATE
APPROVED		DATE
UPDATED		DATE

REFERENCE DRAWINGS

NUMBER	DESCRIPTION

REVISIONS

DATE	BY	DESCRIPTION
08/2001	SYSP	Revised and issued by the Authority

WASHINGTON METROPOLITAN AREA TRANSIT AUTHORITY

DEPARTMENT OF TRANSIT SYSTEM DEVELOPMENT
OFFICE OF SYSTEMS

SUBMITTED _____ DATE

APPROVED _____ DIRECTOR May 3, 2001 DATE

TYPICAL DC POWER DISTRIBUTION

SCALE NONE

DRAWING NO. ST-TC-P-002

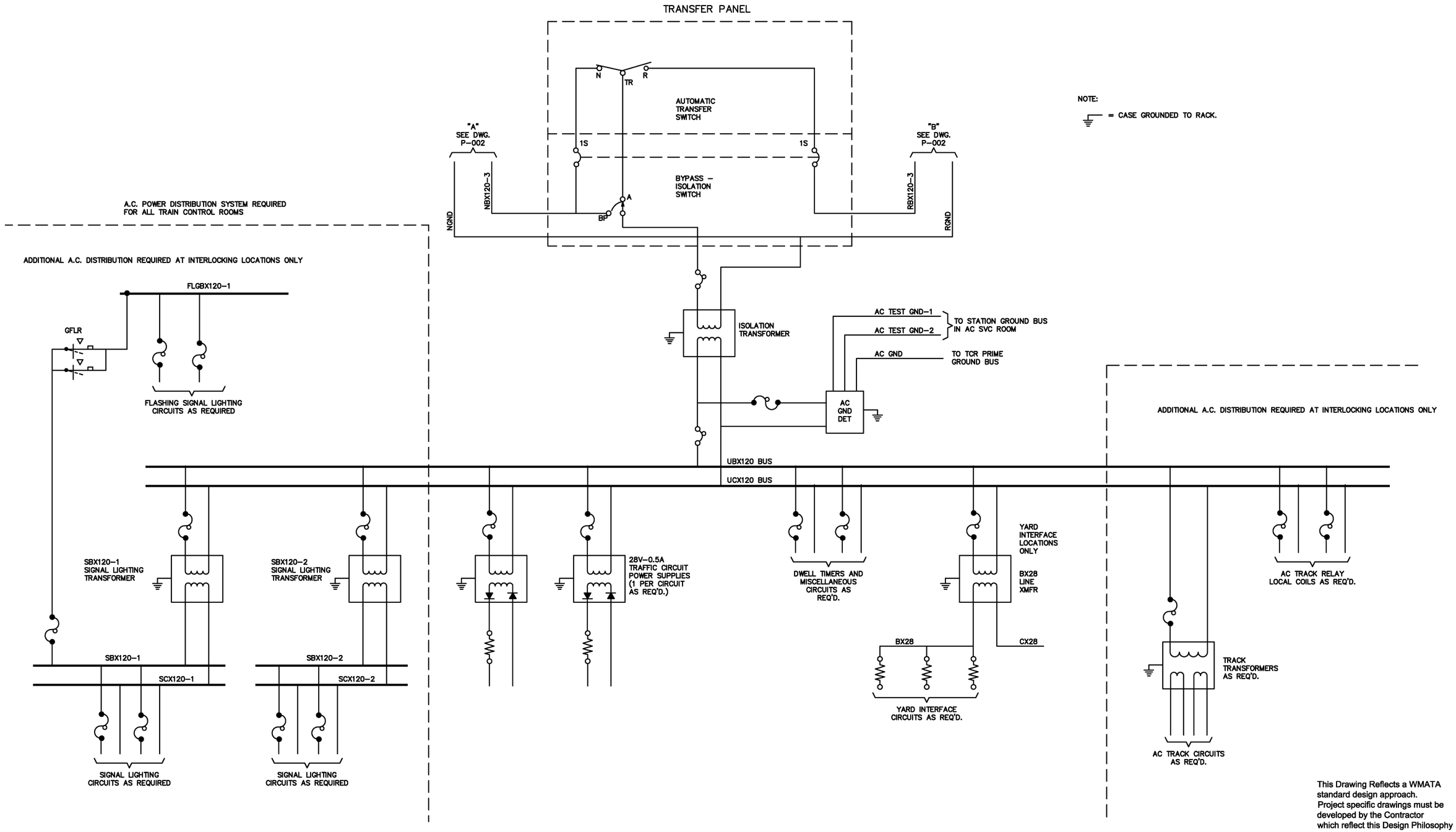

This Drawing Reflects a WMATA standard design approach. Project specific drawings must be developed by the Contractor which reflect this Design Philosophy

DESIGNED	GAH	6-00 DATE
DRAWN	JMR	6-00 DATE
CHECKED		DATE
APPROVED		DATE
UPDATED		DATE

REFERENCE DRAWINGS

NUMBER	DESCRIPTION

REVISIONS

DATE	BY	DESCRIPTION
08/2001	SYSP	Revised and issued by the Authority

WASHINGTON METROPOLITAN AREA TRANSIT AUTHORITY

DEPARTMENT OF TRANSIT SYSTEM DEVELOPMENT
OFFICE OF SYSTEMS

SUBMITTED _____ DATE

APPROVED DIRECTOR _____ May 3, 2001 DATE

TYPICAL UNINTERRUPTIBLE AC POWER DISTRIBUTION

SCALE: NONE

DRAWING NO.: ST-TC-P-003

NOTES:

1. THE FOLLOWING IS THE B28G BLOWN FUSE NOMENCLATURE:

   P – POWER RACKS
   C – STATION SUPPORT RACKS
   E – ENTRANCE RACKS
   T – SPEED COMMAND LOGIC RACKS
   TM– ATP TRACK MODULE RACKS

2. ADD ELECTRICAL INDICATING CIRCUIT BREAKERS TO THE CIRCUIT POWER FAILURE CIRCUIT AS NECESSARY FOR ALL NON–VITAL STATION PROCESSOR POWER SUPPLIES, AND OTHER SPECIAL ENERGY SUPPLY MODULES, AS APPLICABLE.
3. ADD BLOWN FUSE INDICATING DEVICES TO BLOWN FUSE INDICATION CIRCUIT AS NECESSARY TO INCLUDE ALL SPECIAL ENERGY BUSES.

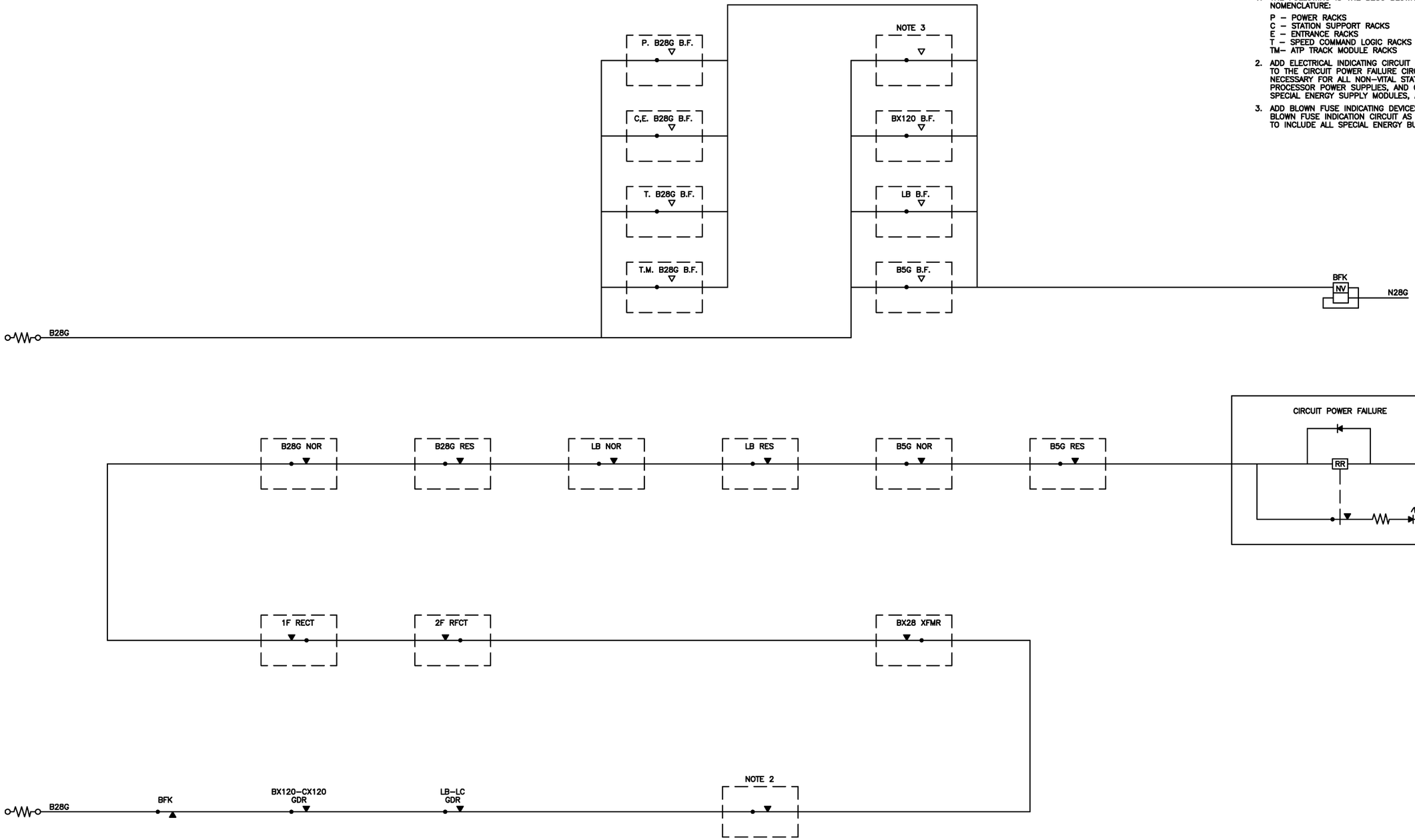

This Drawing Reflects a WMATA standard design approach. Project specific drawings must be developed by the Contractor which reflect this Design Philosophy

DESIGNED	GAH	6–00 DATE
DRAWN	JMR	6–00 DATE
CHECKED		DATE
APPROVED		DATE
UPDATED		DATE

REFERENCE DRAWINGS

NUMBER	DESCRIPTION

REVISIONS

DATE	BY	DESCRIPTION
08/2001	SYSP	Revised and issued by the Authority

WASHINGTON METROPOLITAN AREA TRANSIT AUTHORITY

DEPARTMENT OF TRANSIT SYSTEM DEVELOPMENT
OFFICE OF SYSTEMS

SUBMITTED _____ DATE

APPROVED _____ DIRECTOR May 3, 2001 DATE

TYPICAL POWER FAILURE & BLOWN FUSE CIRCUITS

SCALE	DRAWING NO.
NONE	ST–TC–P–004

NOTES:

1. THE FOLLOWING IS THE B28G BLOWN FUSE NOMENCLATURE:
   - P – POWER RACKS
   - C – STATION SUPPORT RACKS
   - E – ENTRANCE RACKS
   - T – SPEED COMMAND LOGIC RACKS
   - TM– ATP TRACK MODULE RACKS
   - B – VITAL INTERLOCKING SUPPORT RACKS
   - J – NON–VITAL INTERLOCKING SUPPORT RACKS
2. ADD ELECTRICAL INDICATING CIRCUIT BREAKERS TO THE CIRCUIT POWER FAILURE CIRCUIT AS NECESSARY FOR ALL NON–VITAL INTERLOCKING PROCESSOR POWER SUPPLIES, NON–VITAL STATION PROCESSOR POWER SUPPLIES, AND OTHER SPECIAL ENERGY SUPPLY MODULES, AS APPLICABLE.
3. ADD BLOWN FUSE INDICATING DEVICES TO BLOWN FUSE INDICATION CIRCUIT AS NECESSARY TO INCLUDE ALL SPECIAL ENERGY BUSES.

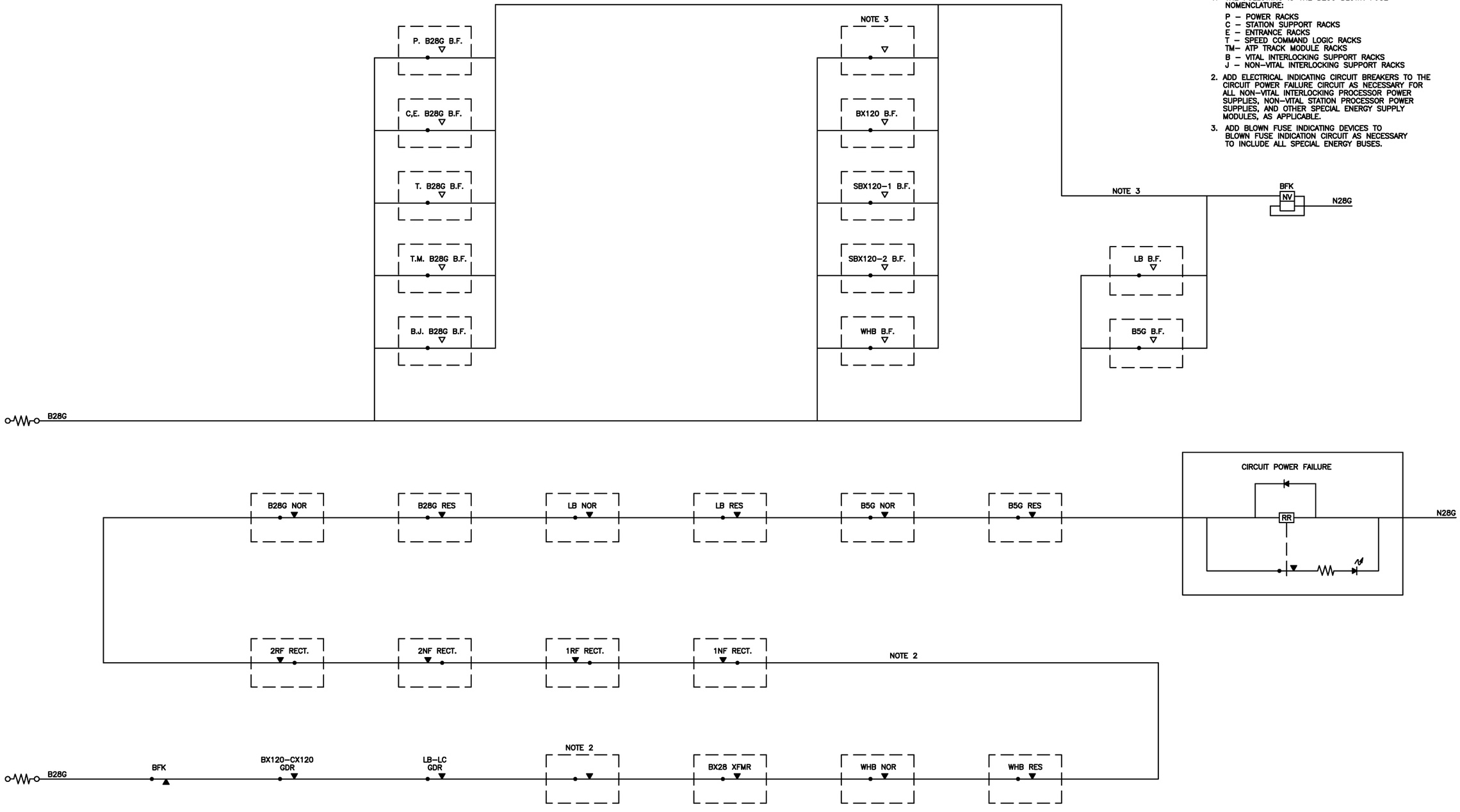

This Drawing Reflects a WMATA standard design approach. Project specific drawings must be developed by the Contractor which reflect this Design Philosophy

DESIGNED	GAH	6–00 DATE
DRAWN	JMR	6–00 DATE
CHECKED		DATE
APPROVED		DATE
UPDATED		DATE

REFERENCE DRAWINGS

NUMBER	DESCRIPTION

REVISIONS

DATE	BY	DESCRIPTION
08/2001	SYSP	Revised and issued by the Authority

WASHINGTON METROPOLITAN AREA TRANSIT AUTHORITY

DEPARTMENT OF TRANSIT SYSTEM DEVELOPMENT
OFFICE OF SYSTEMS

SUBMITTED _____ DATE

APPROVED _____ DIRECTOR May 3, 2001 DATE

TYPICAL POWER FAILURE & BLOWN FUSE CIRCUITS

SCALE: NONE

DRAWING NO.: ST–TC–P–005

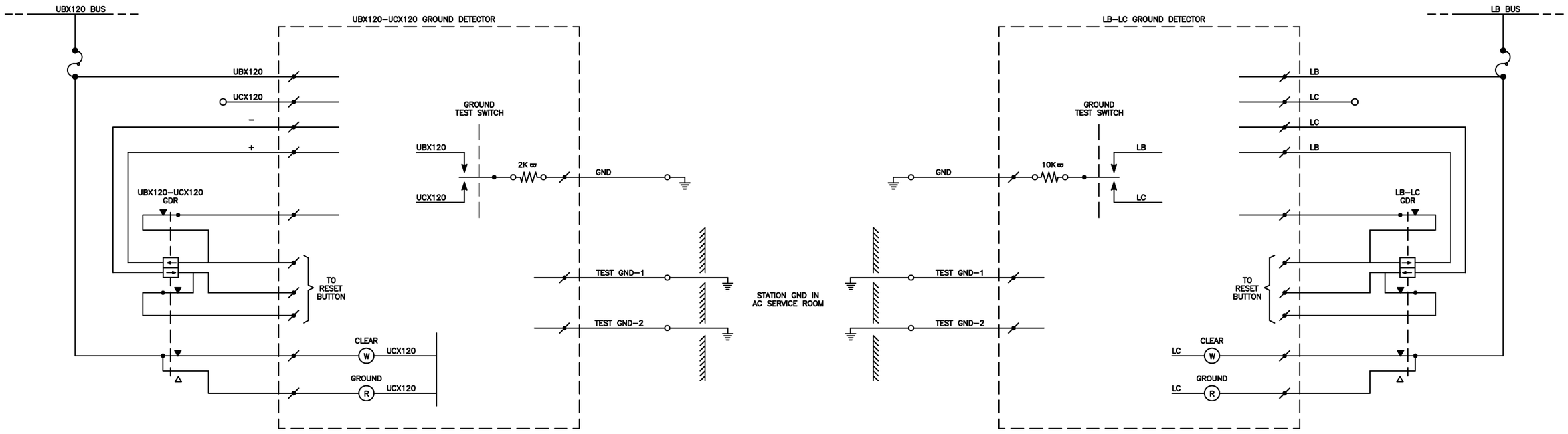

This Drawing Reflects a WMATA standard design approach. Project specific drawings must be developed by the Contractor which reflect this Design Philosophy

DESIGNED	GAH	8–00 DATE
DRAWN	JMR	8–00 DATE
CHECKED		DATE
APPROVED		DATE
UPDATED		DATE

REFERENCE DRAWINGS	
NUMBER	DESCRIPTION

REVISIONS		
DATE	BY	DESCRIPTION
08/2001	SYSP	Revised and issued by the Authority

WASHINGTON METROPOLITAN AREA TRANSIT AUTHORITY

DEPARTMENT OF TRANSIT SYSTEM DEVELOPMENT
OFFICE OF SYSTEMS

SUBMITTED _____ DATE

APPROVED _____ May 3, 2001
DIRECTOR DATE

TYPICAL GROUND DETECTOR CIRCUITS

SCALE: NONE

DRAWING NO.: ST–TC–P–006

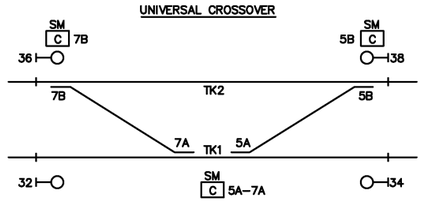

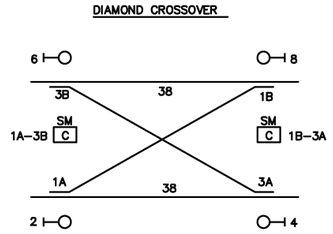

NOTES:
1. FOR SNOWMELTER CONTROL CASE INTERNAL CIRCUITS SEE DWG. NO. P–008.
2. CONTROL CASE FOR EACH TRACK SWITCH EXPOSED TO THE WEATHER.
   EXCEPTION: WHERE A SNOWMELTER CASE CAN BE LOCATED WITHIN 75 FEET OF TWO EXPOSED SWITCHES, ONLY ONE SM CASE, SO LOCATED, SHALL BE PROVIDED FOR THESE TWO SWITCHES.
3. THESE DIODES REQUIRED ONLY AT TERMINAL LOCATIONS.
4. ADDITIONAL WIRING REQUIRED ONLY AT TERMINAL LOCATIONS

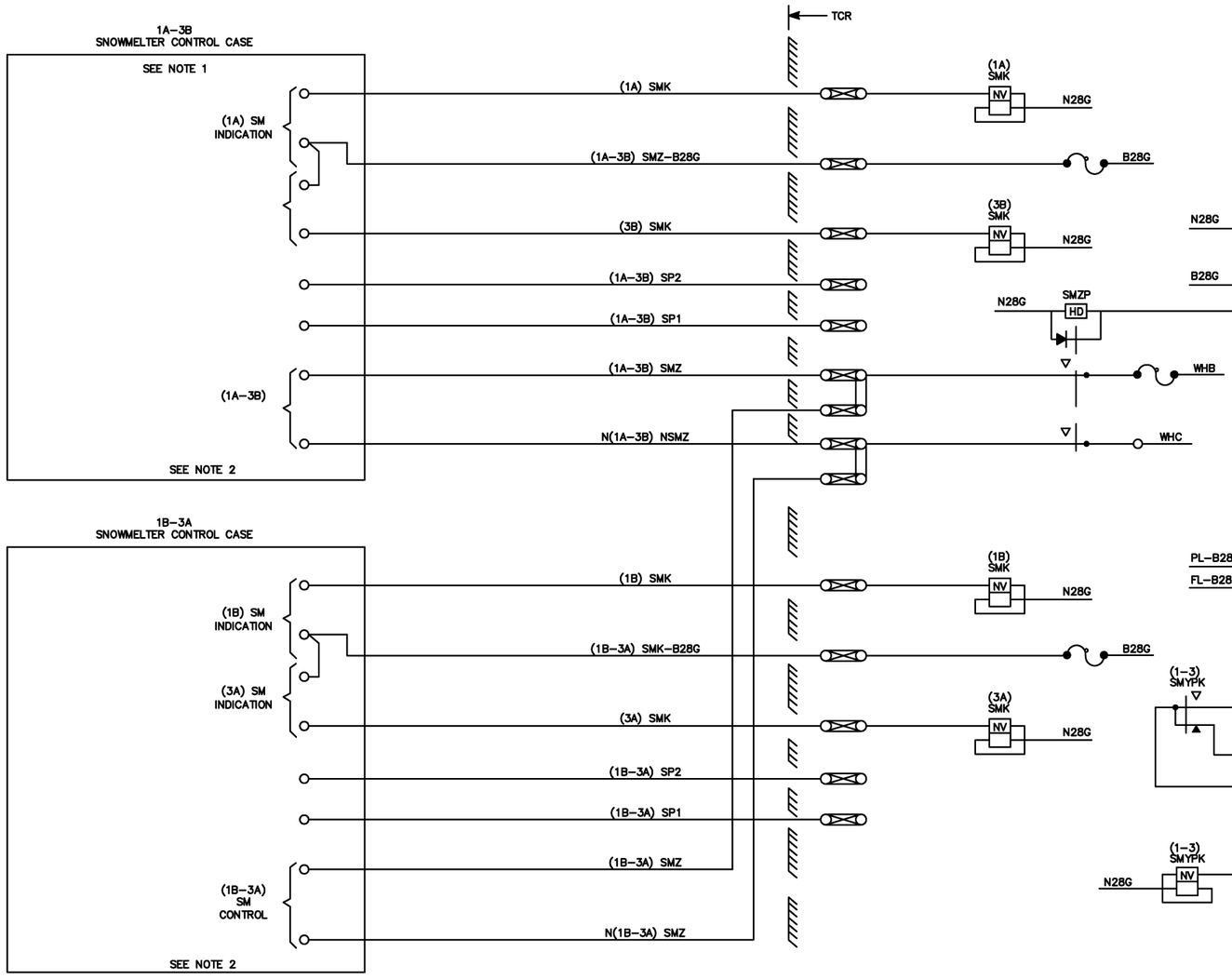

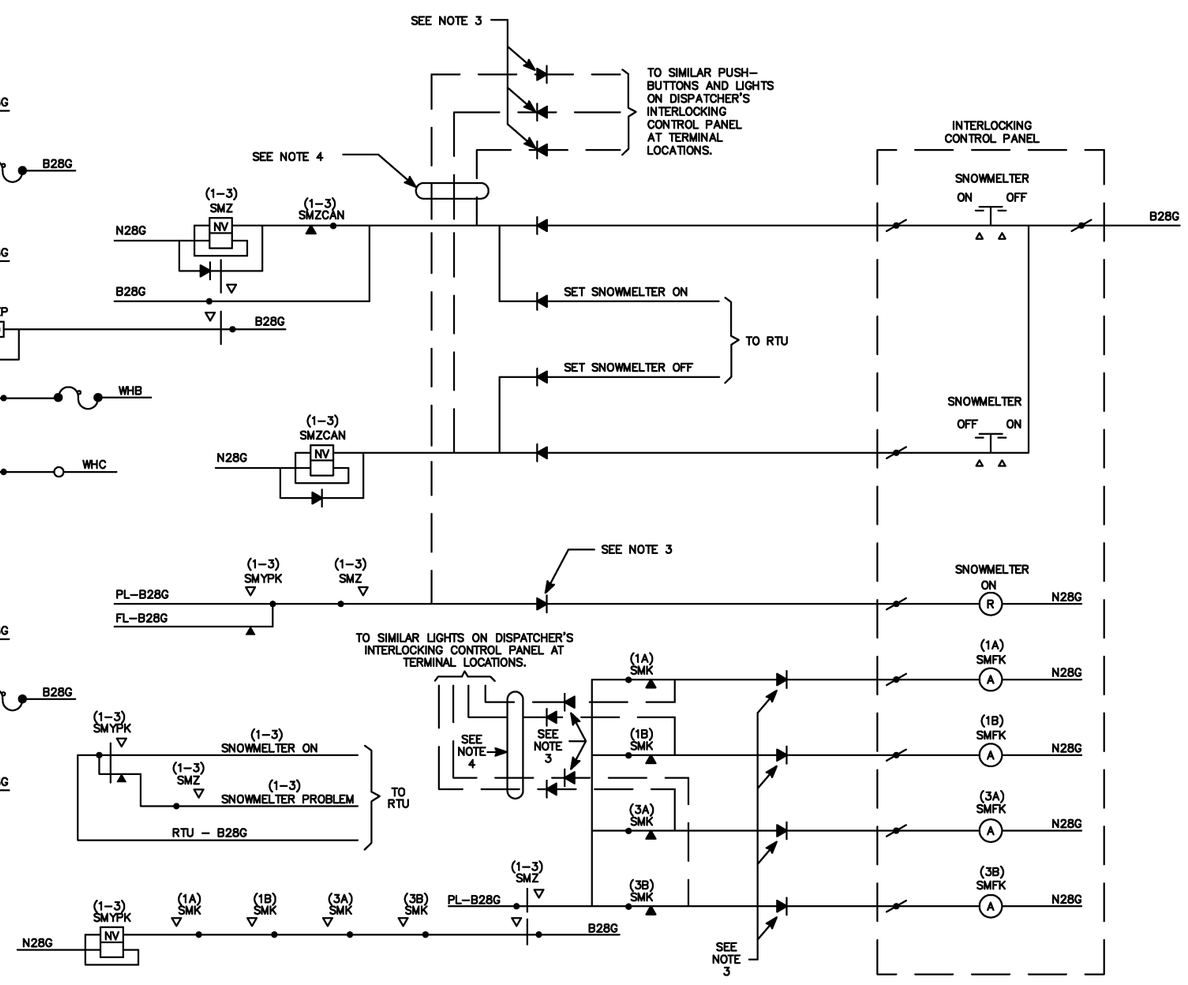

This Drawing Reflects a WMATA standard design approach. Project specific drawings must be developed by the Contractor which reflect this Design Philosophy

DESIGNED	GAH	6–00 DATE
DRAWN	JMR	6–00 DATE
CHECKED		DATE
APPROVED		DATE
UPDATED		DATE

REFERENCE DRAWINGS

NUMBER	DESCRIPTION

REVISIONS

DATE	BY	DESCRIPTION
08/2001	SYSP	Revised and issued by the Authority

WASHINGTON METROPOLITAN AREA TRANSIT AUTHORITY

DEPARTMENT OF TRANSIT SYSTEM DEVELOPMENT
OFFICE OF SYSTEMS

SUBMITTED _____ DATE

APPROVED DIRECTOR _____ May 3, 2001 DATE

TYPICAL SNOWMELTER CONTROL & INDICATION CIRCUITS

SCALE: NONE

DRAWING NO.: ST–TC–P–007

TYPICAL SNOWMELTER CONTROL CASE

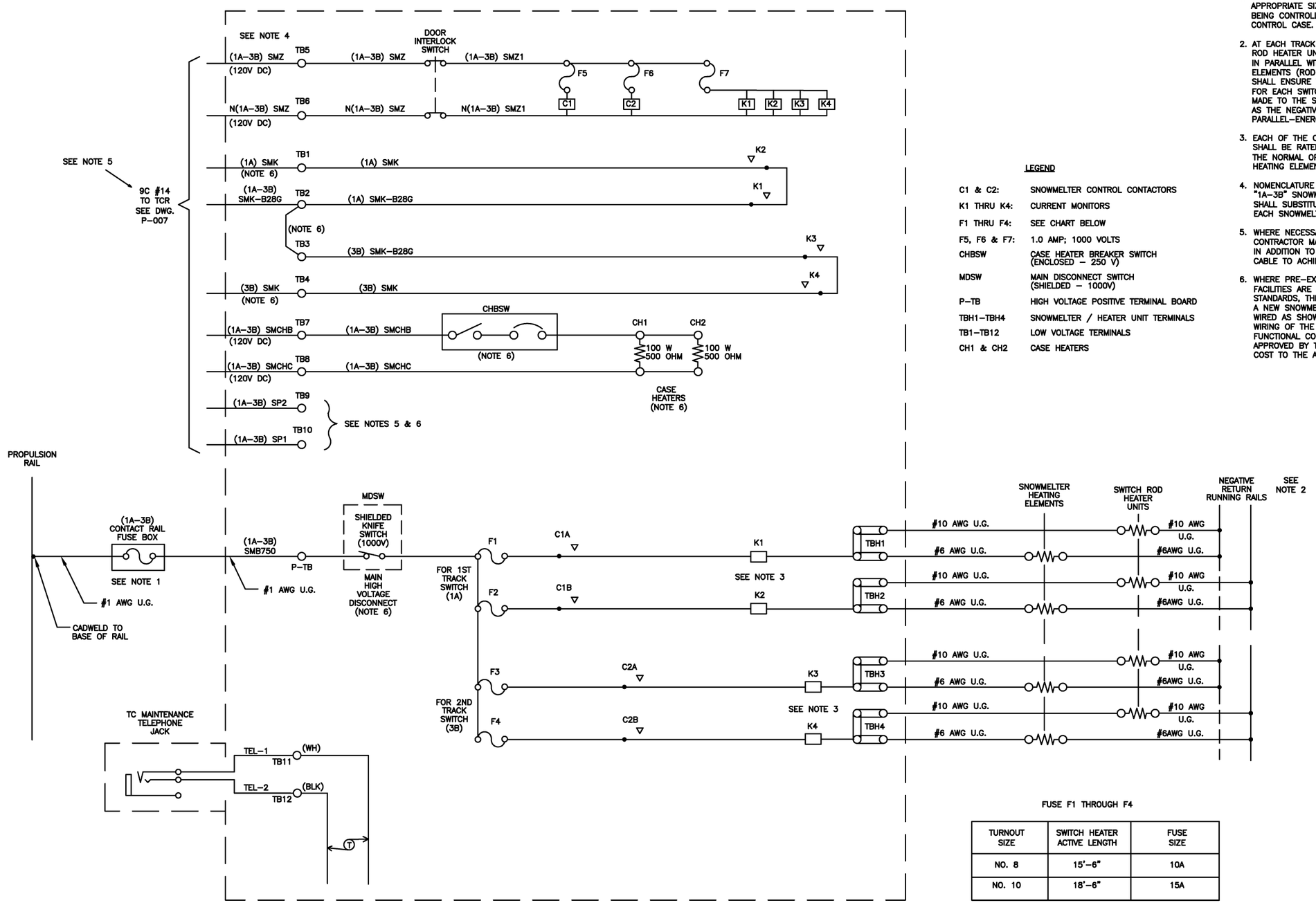

NOTES:

1. CONTRACTOR SHALL PROVIDE FUSE BOX AND FUSE OF APPROPRIATE SIZE FOR THE SNOWMELTER EQUIPMENT BEING CONTROLLED FROM EACH INDIVIDUAL SNOWMELTER CONTROL CASE. SEE SECTION 16969.
2. AT EACH TRACK SWITCH, EACH OF THE TWO SWITCH ROD HEATER UNITS (CRIB HEATERS) SHALL BE ENERGIZED IN PARALLEL WITH ONE OF THE TWO SNOWMELTER HEATING ELEMENTS (ROD–TYPE RAIL HEATERS). THE CONTRACTOR SHALL ENSURE THAT THE NEGATIVE RETURN CONNECTION FOR EACH SWITCH ROD HEATER UNIT (CRIB HEATER) IS MADE TO THE SAME NEGATIVE RETURN (RUNNING) RAIL AS THE NEGATIVE–RETURN–RAIL CONNECTION FOR ITS PARALLEL–ENERGIZED SNOWMELTER HEATING ELEMENT.
3. EACH OF THE CURRENT MONITORS (K1 THROUGH K4) SHALL BE RATED TO DROP WHEN ITS CURRENT FALLS BELOW THE NORMAL OPERATING CURRENT OF ITS SNOWMELTER HEATING ELEMENT COMBINATION.
4. NOMENCLATURE SHOWN IN PARENTHESES IS SPECIFIC FOR A "1A–3B" SNOWMELTER CONTROL CASE ONLY. THE CONTRACTOR SHALL SUBSTITUTE APPROPRIATE SIMILAR NOMENCLATURE FOR EACH SNOWMELTER CASE INSTALLED.
5. WHERE NECESSARY TO UPGRADE PRE–EXISTING LOCATION(S), THE CONTRACTOR MAY PROVIDE NEW 2–CONDUCTOR #14 CABLE(S) IN ADDITION TO THE PREVIOUSLY INSTALLED SM CONTROL CABLE TO ACHIEVE THE REQUIRED NINE CONDUCTORS.
6. WHERE PRE–EXISTING SNOWMELTER CONTROL AND INDICATION FACILITIES ARE TO BE UPGRADED TO CURRENT AUTHORITY STANDARDS, THE CONTRACTOR SHALL EITHER PROVIDE A NEW SNOWMELTER CONTROL CASE EQUIPPED AND WIRED AS SHOWN, OR REVISE THE EQUIPMENT AND WIRING OF THE PRE–EXISTING SNOWMELTER LAYOUT TO THE FUNCTIONAL CONFIGURATION SHOWN IN A MANNER PREVIOUSLY APPROVED BY THE ENGINEER, AT NO ADDITIONAL COST TO THE AUTHORITY.

LEGEND

C1 & C2:	SNOWMELTER CONTROL CONTACTORS
K1 THRU K4:	CURRENT MONITORS
F1 THRU F4:	SEE CHART BELOW
F5, F6 & F7:	1.0 AMP; 1000 VOLTS
CHBSW	CASE HEATER BREAKER SWITCH (ENCLOSED – 250 V)
MDSW	MAIN DISCONNECT SWITCH (SHIELDED – 1000V)
P–TB	HIGH VOLTAGE POSITIVE TERMINAL BOARD
TBH1–TBH4	SNOWMELTER / HEATER UNIT TERMINALS
TB1–TB12	LOW VOLTAGE TERMINALS
CH1 & CH2	CASE HEATERS

FUSE F1 THROUGH F4

TURNOUT SIZE	SWITCH HEATER ACTIVE LENGTH	FUSE SIZE
NO. 8	15'–6"	10A
NO. 10	18'–6"	15A

This Drawing Reflects a WMATA standard design approach. Project specific drawings must be developed by the Contractor which reflect this Design Philosophy

DESIGNED	GAH	6–00 DATE
DRAWN	JMR	6–00 DATE
CHECKED		DATE
APPROVED		DATE
UPDATED		DATE

REFERENCE DRAWINGS

NUMBER	DESCRIPTION

REVISIONS

DATE	BY	DESCRIPTION
08/2001	SYSP	Revised and issued by the Authority

WASHINGTON METROPOLITAN AREA TRANSIT AUTHORITY

DEPARTMENT OF TRANSIT SYSTEM DEVELOPMENT
OFFICE OF SYSTEMS

SUBMITTED _____ DATE

APPROVED _____ DIRECTOR May 3, 2001 DATE

TYPICAL SNOWMELTER CONTROL CASE CIRCUITS

SCALE NONE

DRAWING NO. ST–TC–P–008

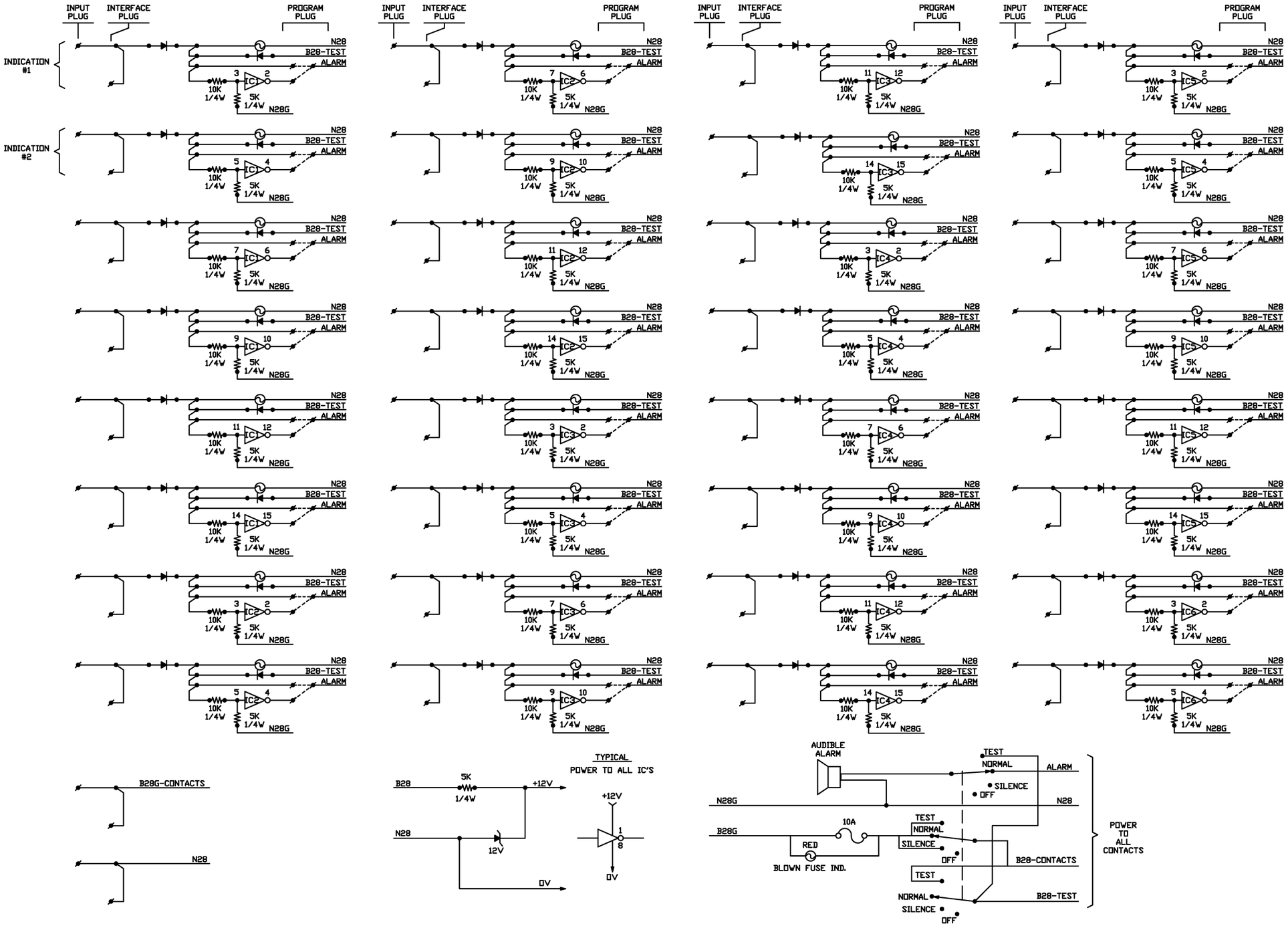

NOTES:

1. ALL VISUAL INDICATOR "LIGHTS" SHALL BE LIGHT EMITTING DIODES (LEDs) OF THE APPROPRIATE COLOR, SEE SECTION 16955, TRACK AND ALARM INDICATION PANELS.

This Drawing Reflects a WMATA standard design approach. Project specific drawings must be developed by the Contractor which reflect this Design Philosophy

DESIGNED	GAH	6-00 DATE
DRAWN	JMR	6-00 DATE
CHECKED		DATE
APPROVED		DATE
UPDATED		DATE

REFERENCE DRAWINGS

NUMBER	DESCRIPTION

REVISIONS

DATE	BY	DESCRIPTION
08/2001	SYSP	Revised and issued by the Authority

WASHINGTON METROPOLITAN AREA TRANSIT AUTHORITY

DEPARTMENT OF TRANSIT SYSTEM DEVELOPMENT
OFFICE OF SYSTEMS

SUBMITTED _____ DATE

APPROVED _____ DIRECTOR May 3, 2001 DATE

TYPICAL ALARM AND/OR TRACK INDICATION PANEL – INTERNAL CIRCUITS

LOCATION: SYSTEMWIDE

SCALE: NONE

DRAWING NO.: ST-TC-P-009

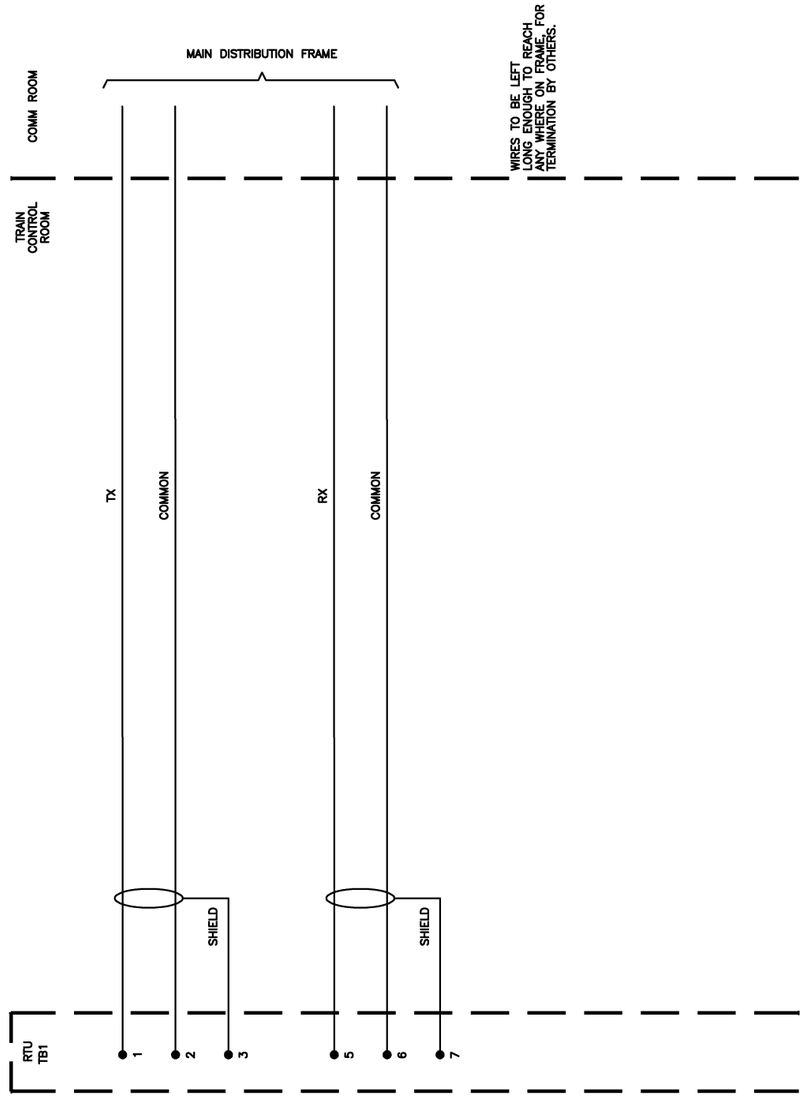

NOTES:

1. ALL TERMINATION DETAILS SHALL BE PROVIDED BY THE CONTRACTOR.

ALL WIRES #20 UNLESS NOTED.

This Drawing Reflects a WMATA standard design approach. Project specific drawings must be developed by the Contractor which reflect this Design Philosophy

DESIGNED GAH	6-00 DATE	
DRAWN JMR	6-00 DATE	
CHECKED	DATE	
APPROVED	DATE	
UPDATED	DATE	

REFERENCE DRAWINGS

NUMBER	DESCRIPTION

REVISIONS

DATE	BY	DESCRIPTION
08/2001	SYSP	Revised and issued by the Authority

WASHINGTON METROPOLITAN AREA TRANSIT AUTHORITY

DEPARTMENT OF TRANSIT SYSTEM DEVELOPMENT
OFFICE OF SYSTEMS

SUBMITTED _____ DATE

APPROVED DIRECTOR _____ May 3, 2001 DATE

TYPICAL RTU WIRING COMM. ROOM, MAIN DISTRIBUTION FRAME

SCALE NONE

DRAWING NO. ST-TC-RTU-011

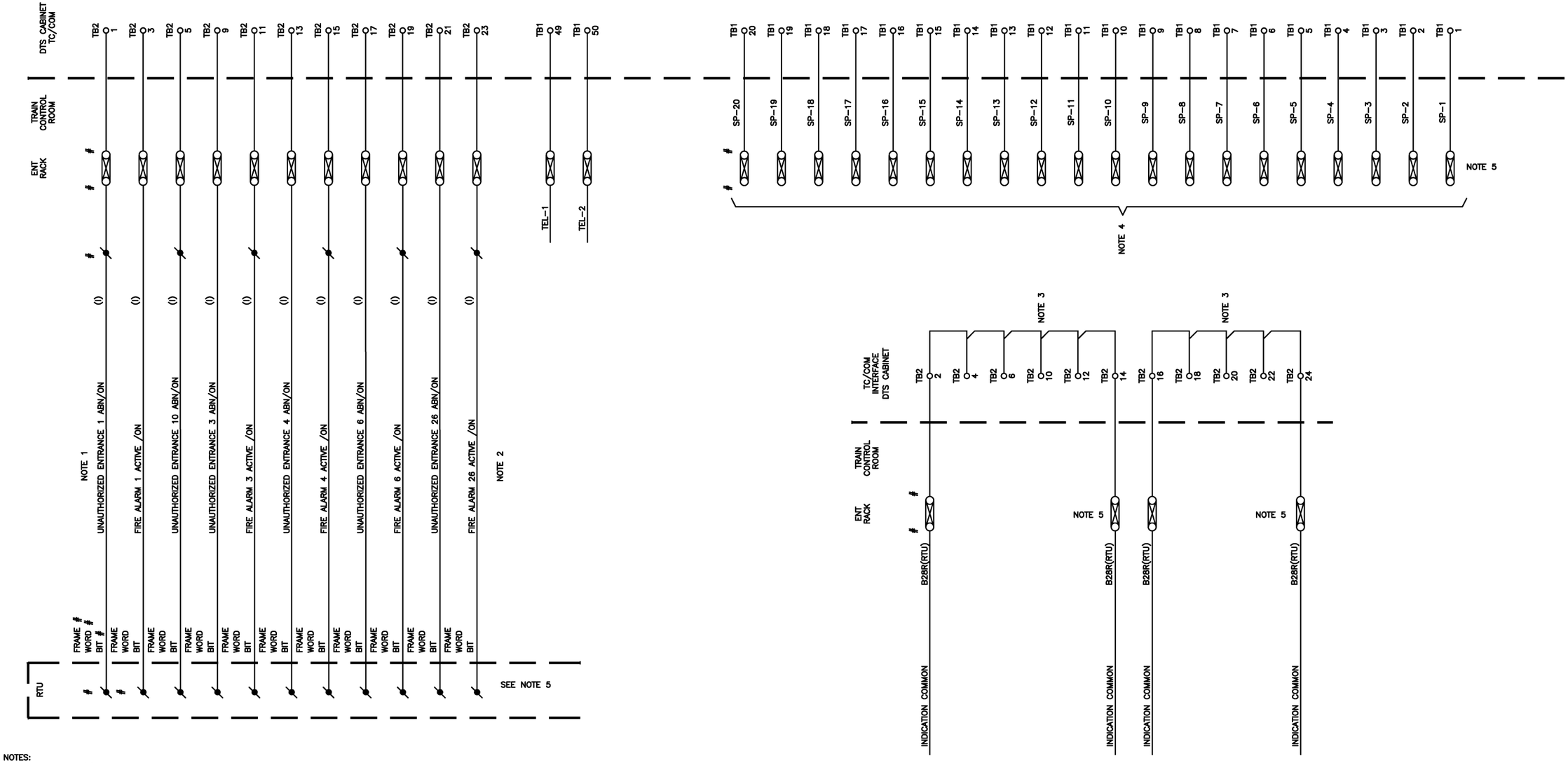

NOTES:

1. CONTROL (C) AND INDICATION (I) NAMES MUST AGREE WITH THE RTU SCAN SHEETS.
2. CONTINUE UNAUTHORIZED ENTRANCE AND FIRE ALARM WIRING AS REQUIRED BY EACH SPECIFIC LOCATION.
3. THE CONTRACTOR SHALL PROVIDE A SEPARATE ENERGY LOOP FOR EVERY 8 INDICATIONS (MAX) AND AS NECESSARY TO SERVE ALL RTU INDICATIONS.
4. TERMINATE ALL SPARE CONDUCTORS AT EACH SPECIFIC LOCATION. (TB1-1 THRU 20 AND TB1-25 THRU 32 ARE AVAILABLE FOR SPARE TERMINATIONS).
5. # ALL TERMINATIONS AND DETAILS SHALL BE PROVIDED BY THE CONTRACTOR.

(I) = INDICATION
(C) = CONTROL
ALL WIRES #20 UNLESS NOTED.

This Drawing Reflects a WMATA standard design approach. Project specific drawings must be developed by the Contractor which reflect this Design Philosophy

DESIGNED	GAH	6-00 DATE
DRAWN	JMR	6-00 DATE
CHECKED		DATE
APPROVED		DATE
UPDATED		DATE

REFERENCE DRAWINGS

NUMBER	DESCRIPTION

REVISIONS

DATE	BY	DESCRIPTION
08/2001	SYSP	Revised and issued by the Authority

WASHINGTON METROPOLITAN AREA TRANSIT AUTHORITY

DEPARTMENT OF TRANSIT SYSTEM DEVELOPMENT
OFFICE OF SYSTEMS

SUBMITTED _____ DATE

APPROVED _____ DIRECTOR May 3, 2001 DATE

TYPICAL RTU WIRING TC/COM INTERFACE CABINETS

SCALE: NONE

DRAWING NO.: ST-TC-RTU-012

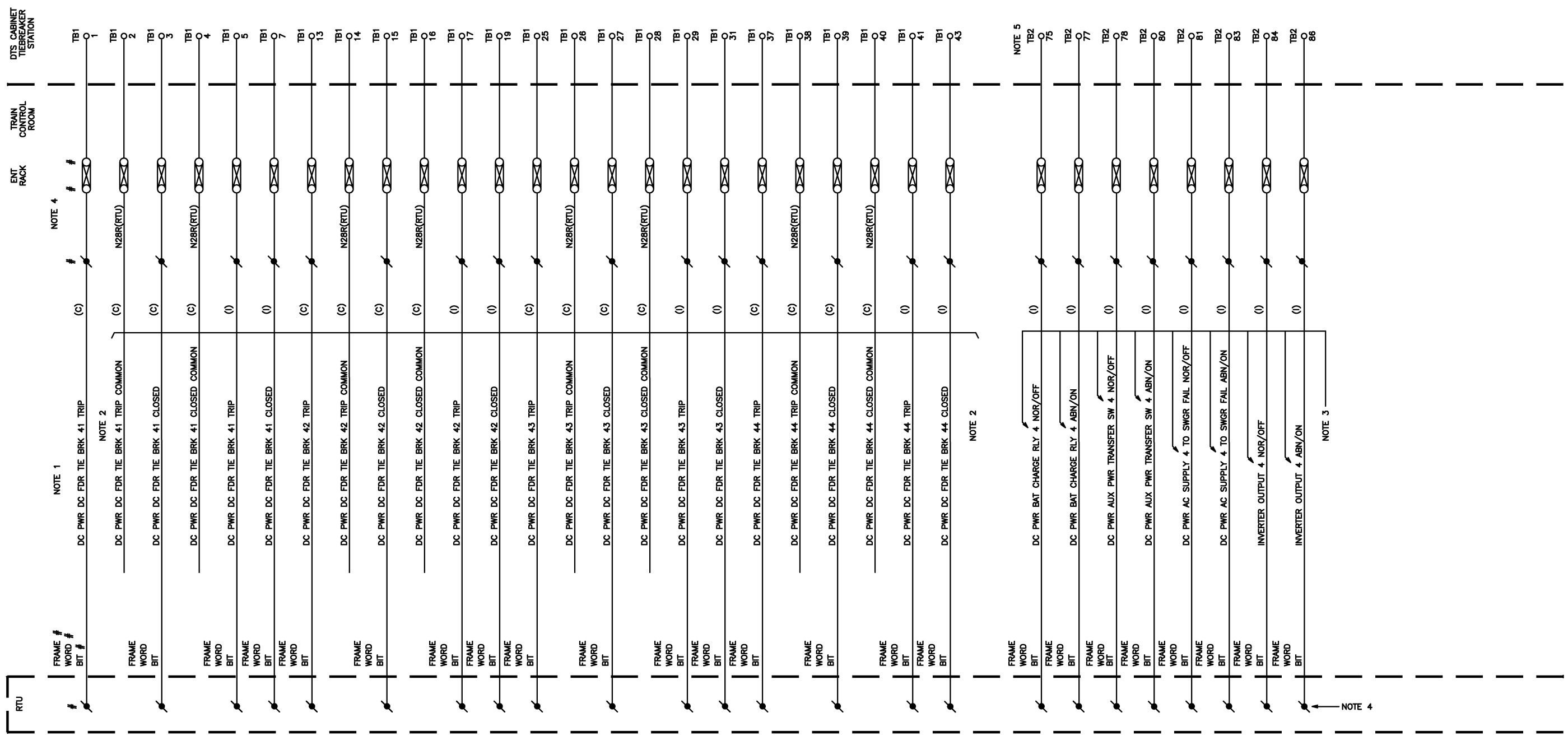

NOTES:

1. CONTROL (C) AND INDICATION (I) NAMES MUST AGREE WITH THE RTU SCAN SHEETS.
2. WHEN TWO TIE BREAKER STATIONS ARE IN THE SAME RTU CONTROL AREA, THE SECOND TBS SHALL USE THE SERIES NUMBER AS SHOWN IN TABLE 1.
3. FOR THE SECOND TIE BREAKER, USE NUMERAL 6; FOR YARD INTERFACE TIEBREAKER, USE 8.
4. # ALL TERMINATIONS AND DETAILS SHALL BE PROVIDED BY THE CONTRACTOR.
5. CONTINUE TIE BREAKERS #45 (65) AND #46 (66) ON TB-2 IF REQUIRED.

DC PWR	BRK NO.	1st TBS BRK	2nd TBS BRK	YARD AREA INTERFACE BRK
DC FDR TIE BRK	1	41	61	81
	2	42	62	82
	3	43	63	83
	4	44	64	84
	5	45	65	85
	6	46	66	86
	7	47	67	87
	8	48	68	88

TABLE 1

(I) = INDICATION
(C) = CONTROL
ALL WIRES #20 UNLESS NOTED.

This Drawing Reflects a WMATA standard design approach. Project specific drawings must be developed by the Contractor which reflect this Design Philosophy

DESIGNED GAH 6-00
DRAWN JMR 6-00
CHECKED
APPROVED
UPDATED

REFERENCE DRAWINGS	
NUMBER	DESCRIPTION

REVISIONS		
DATE	BY	DESCRIPTION
08/2001	SYSP	Revised and issued by the Authority

WASHINGTON METROPOLITAN AREA TRANSIT AUTHORITY

DEPARTMENT OF TRANSIT SYSTEM DEVELOPMENT
OFFICE OF SYSTEMS

SUBMITTED _____ DATE

APPROVED _____ DIRECTOR May 3, 2001 DATE

TYPICAL RTU WIRING TIE BREAKER STATIONS

SH. 1 OF 3

SCALE: NONE

DRAWING NO.: ST-TC-RTU-013

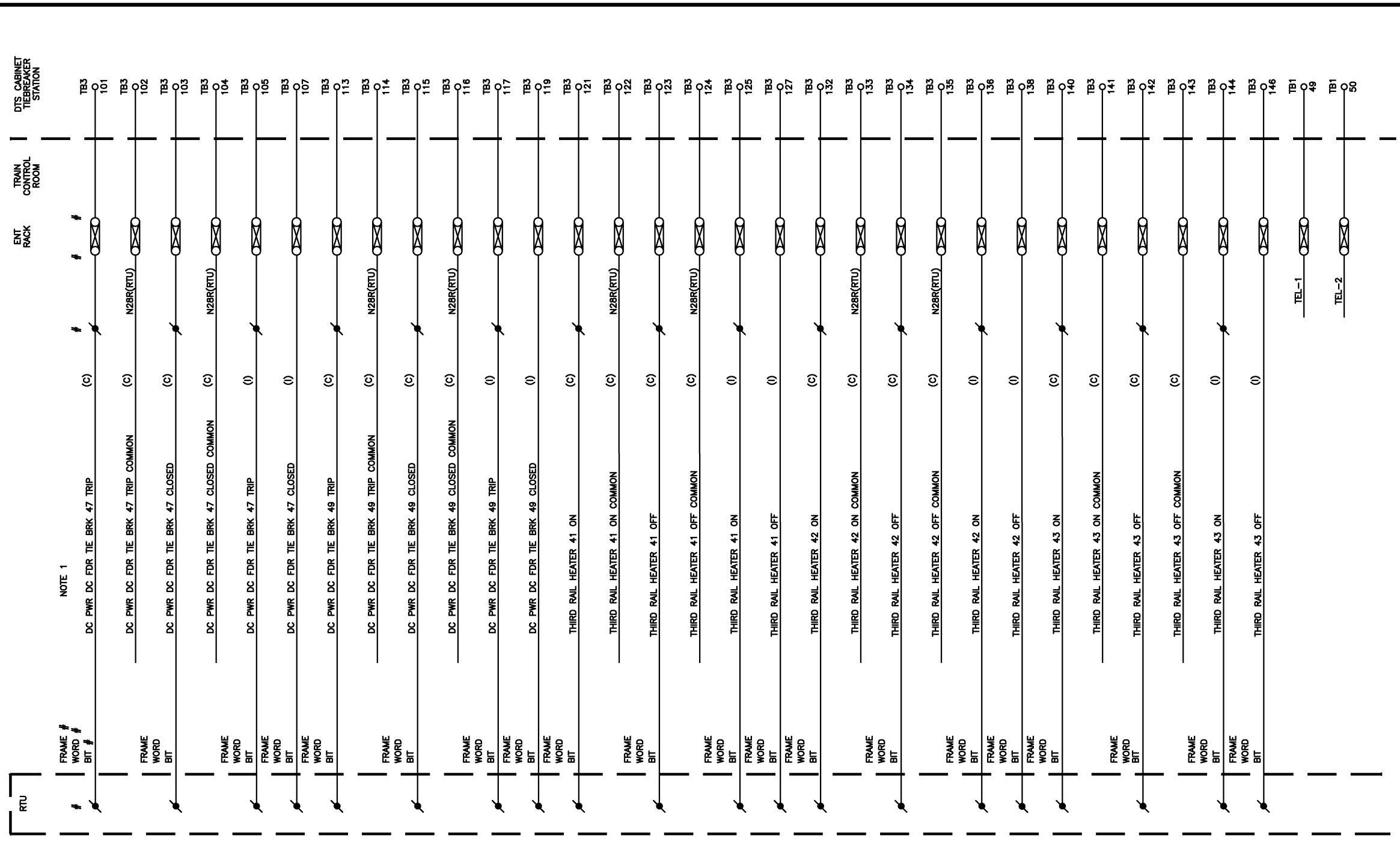

NOTES:

1. CONTROL (C) AND INDICATION (I) NAMES MUST AGREE WITH THE RTU SCAN SHEETS.
2. SEE NOTE 2 AND TABLE 1 ON DWG. ATCINF-RTU-013.

(I) = INDICATION
(C) = CONTROL
ALL WIRES #20 UNLESS NOTED.

This Drawing Reflects a WMATA standard design approach. Project specific drawings must be developed by the Contractor which reflect this Design Philosophy

DESIGNED GAH 11-00 DATE	REFERENCE DRAWINGS	REVISIONS
DRAWN JMR 11-00 DATE	NUMBER / DESCRIPTION	DATE / BY / DESCRIPTION
CHECKED DATE		
APPROVED DATE		

WASHINGTON METROPOLITAN AREA TRANSIT AUTHORITY

DEPARTMENT OF TRANSIT SYSTEM DEVELOPMENT
OFFICE OF SYSTEMS

SUBMITTED DATE

APPROVED DIRECTOR May 3, 2001 DATE

REMOTE TERMINAL UNIT TO TYPICAL TIE BREAKER STATIONS

SCALE: NONE

DRAWING NO.: ST-TC-RTU-014

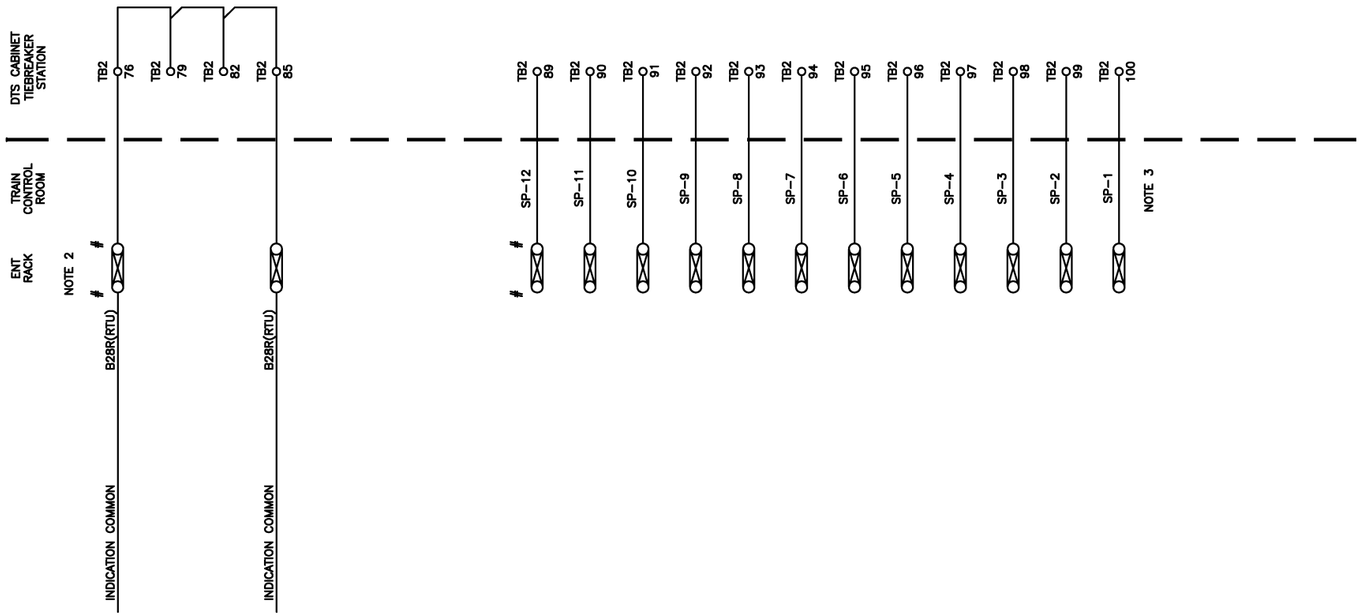

NOTES:

1. THE CONTRACTOR SHALL PROVIDE A SEPARATE ENERGY LOOP FOR EVERY 8 INDICATIONS (MAX) AND AS NECESSARY TO SERVE ALL RTU INDICATIONS.
2. # ALL TERMINATIONS AND DETAILS SHALL BE PROVIDED BY THE CONTRACTOR.
3. TERMINATE SPARES AS REQUIRED.

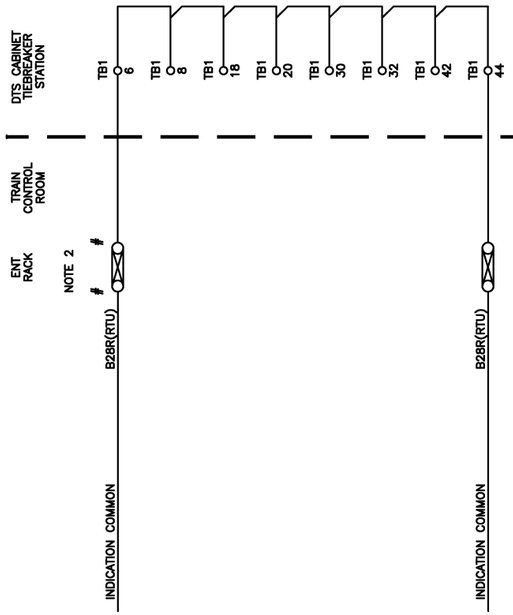

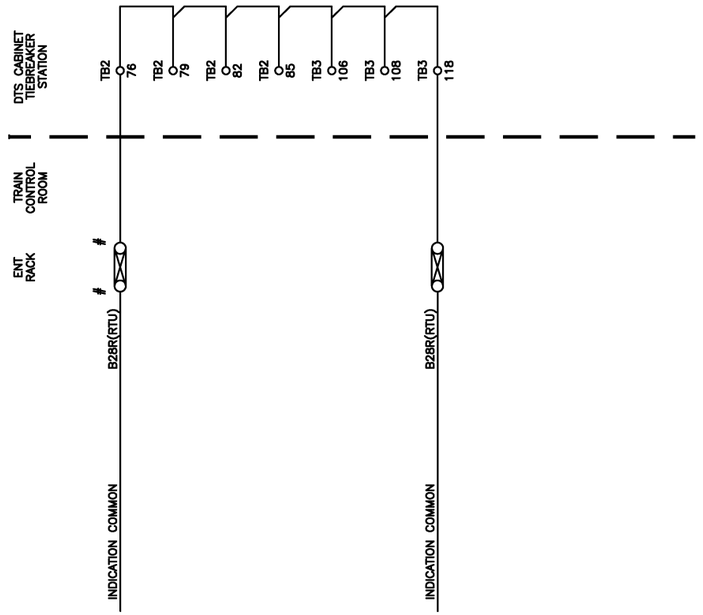

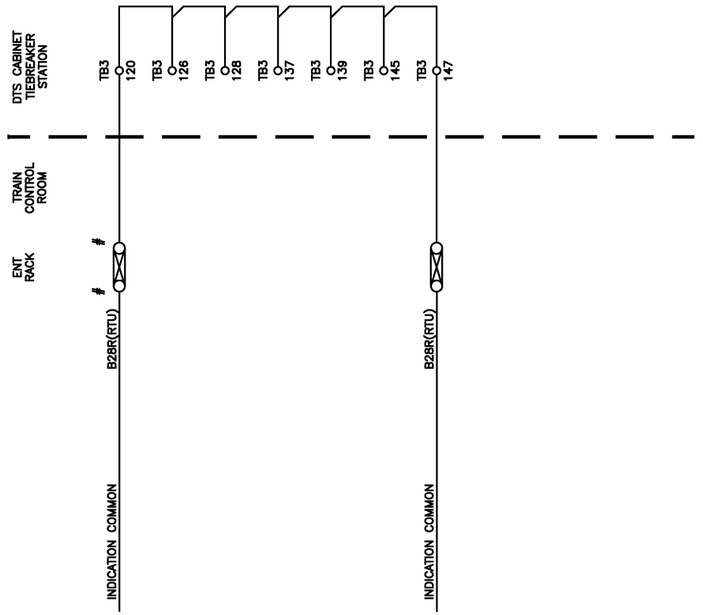

(I) = INDICATION
(C) = CONTROL
ALL WIRES #20 UNLESS NOTED.

This Drawing Reflects a WMATA standard design approach. Project specific drawings must be developed by the Contractor which reflect this Design Philosophy

DESIGNED	GAH	11-00 DATE
DRAWN	JMR	11-00 DATE
CHECKED		DATE
APPROVED		DATE
UPDATED		DATE

REFERENCE DRAWINGS	
NUMBER	DESCRIPTION

REVISIONS		
DATE	BY	DESCRIPTION
08/2001	SYSP	Revised and issued by the Authority

WASHINGTON METROPOLITAN AREA TRANSIT AUTHORITY

DEPARTMENT OF TRANSIT SYSTEM DEVELOPMENT
OFFICE OF SYSTEMS

SUBMITTED _____ DATE

APPROVED _____ DIRECTOR May 3, 2001 DATE

REMOTE TERMINAL UNIT TO TYPICAL TIE BREAKER STATIONS SH. 3 OF 3

SCALE NONE

DRAWING NO. ST-TC-RTU-015

NOTES:

1. WITH REFERENCE TO THE TC MAINTENANCE TELEPHONE SYSTEM, THE TERM "INBOUND" REFERS TO THE TRACK DIRECTION (FROM THE TCR) TOWARD METRO CENTER AND THE TERM "OUTBOUND" REFERS TO THE TRACK DIRECTION (FROM THE TCR) AWAY FROM METRO CENTER, ON EITHER TRACK.
2. ALL EXTERNAL TC MAINTENANCE TELEPHONE CABLES SHALL BE #16 TWISTED PAIR AS SPECIFIED IN SECTION 16949.

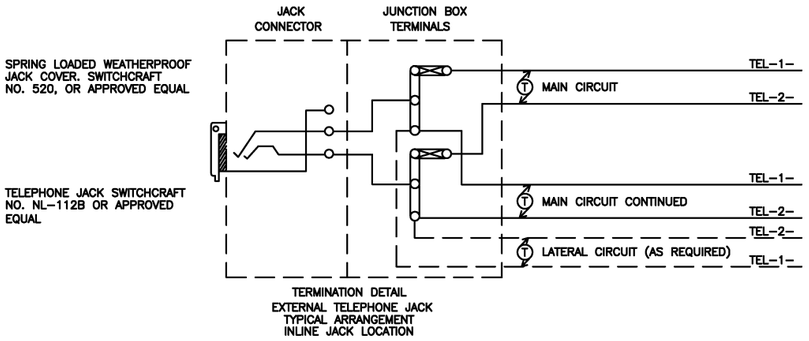

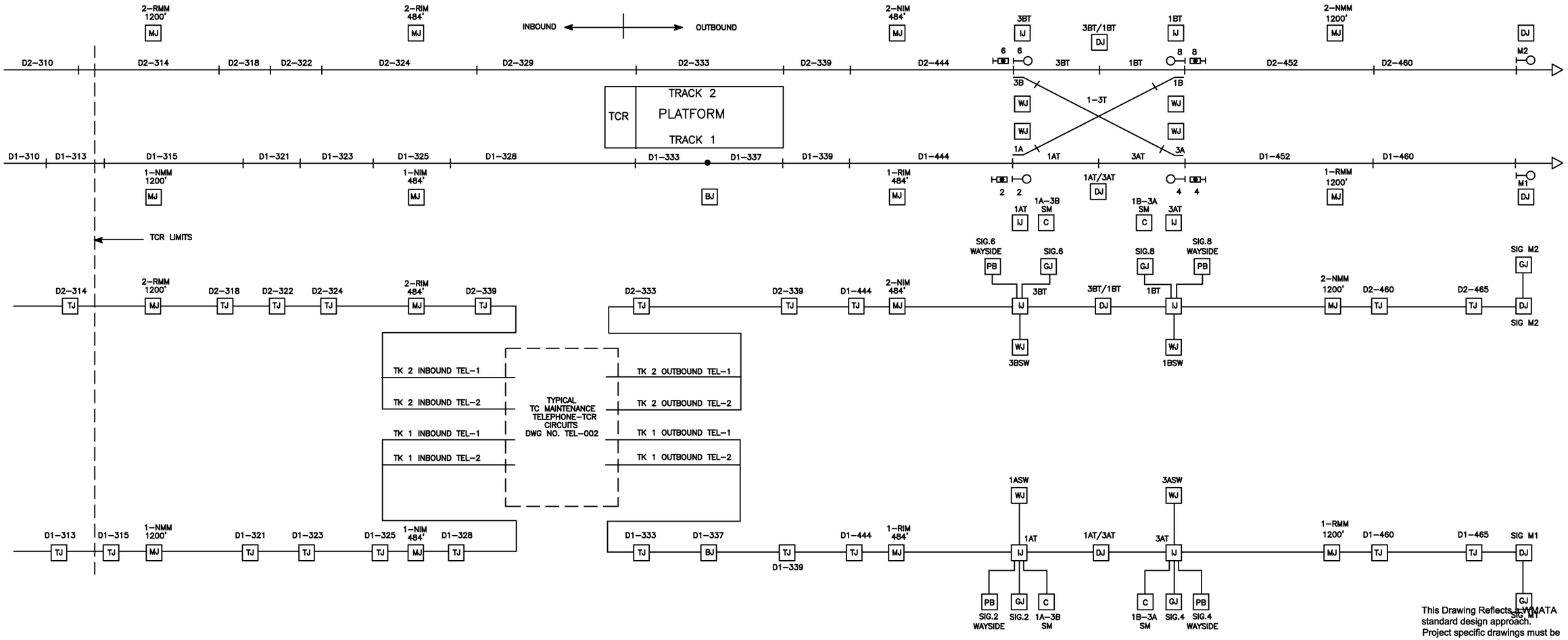

This Drawing Reflects a WMATA standard design approach. Project specific drawings must be developed by the Contractor which reflect this Design Philosophy

DESIGNED	GAH	2-00 DATE
DRAWN	JMR	2-00 DATE
CHECKED		DATE
APPROVED		DATE
UPDATED		DATE

REFERENCE DRAWINGS

NUMBER	DESCRIPTION

REVISIONS

DATE	BY	DESCRIPTION
08/2001	SYSP	Revised and issued by the Authority

WASHINGTON METROPOLITAN AREA TRANSIT AUTHORITY

DEPARTMENT OF TRANSIT SYSTEM DEVELOPMENT
OFFICE OF SYSTEMS

SUBMITTED _____ DATE

APPROVED _____ DIRECTOR May 3, 2001 DATE

TYPICAL TC MAINTENANCE TELEPHONE CIRCUITS - FOR WAYSIDE ATC EQUIPMENT

SHEET 1

SCALE: NONE

DRAWING NO.: ST-TC-TEL-001

NOTE: 1. ALL RACKS WITHIN TCR SHALL HAVE TC MAINTENANCE TELEPHONE JACKS FRONT AND REAR.

2. ROTARY SWITCH AND ASSOCIATED SWITCH WAFERS ARE SHOWN IN THE "TCR/OB/IB" POSITION.

TC MAINTENANCE TELEPHONE CIRCUITS WAYSIDE ATC EQPT. DWG NO. TEL-001

TK2 INBOUND TEL-1

TK2 INBOUND TEL-2

TK1 INBOUND TEL-1

TK1 INBOUND TEL-2

TCM TEL-1 (RING)

TCM TEL-2 (TIP)

TC MAINTENANCE TELEPHONE ROTARY SWITCH WIRING AS VIEWED FROM FRONT

TK2 OUTBOUND TEL-1

TK2 OUTBOUND TEL-2

TK1 OUTBOUND TEL-1

TK1 OUTBOUND TEL-2

TC MAINTENANCE TELEPHONE CIRCUITS WAYSIDE ATC EQPT. DWG NO. TEL-001

TCM TEL-1 (RING)

TCM TEL-2 (TIP)

TO TC MAINTENANCE TELEPHONE CIRCUITS FOR DTS INTERFACE JUNCTION BOXES DWG. NO. TEL-003

FRONT REAR RACK

REAR FRONT RACK

WALL-MOUNTED INTERLOCKING CONTROL PANEL (WHERE APPLICABLE)

DISPATCHERS PANEL(S) (WHERE APPLICABLE)

TCM TEL-2 (TIP)

TCM TEL-1 (RING)

TRAIN CONTROL MAINTENANCE TELEPHONE ROTARY SWITCH PANEL

TRAIN CONTROL MAINTENANCE TELEPHONE

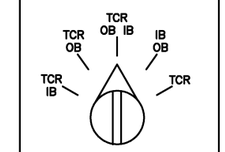

This Drawing Reflects a WMATA standard design approach. Project specific drawings must be developed by the Contractor which reflect this Design Philosophy

DESIGNED	GAH	2-00 DATE
DRAWN	JMR	2-00 DATE
CHECKED		DATE
APPROVED		DATE
UPDATED		DATE

REFERENCE DRAWINGS

NUMBER	DESCRIPTION

REVISIONS

DATE	BY	DESCRIPTION
08/2001	SYSP	Revised and issued by the Authority

WASHINGTON METROPOLITAN AREA TRANSIT AUTHORITY

DEPARTMENT OF TRANSIT SYSTEM DEVELOPMENT
OFFICE OF SYSTEMS

SUBMITTED _____ DATE

APPROVED _____ DIRECTOR May 3, 2001 DATE

TYPICAL TC MAINTENANCE TELEPHONE CIRCUITS - FOR TRAIN CONTROL ROOMS

LOCATION: SYSTEMWIDE

SHEET 2

SCALE: NONE

DRAWING NO.: ST-TC-TEL-002

NOTES:

1. THE CONTRACTOR SHALL PROVIDE A TC MAINTENANCE TELEPHONE JACK IN EACH DTS INTERFACE JUNCTION BOX. THE DTS JUNCTION BOX LOCATIONS SHALL BE AS INDICATED ON THE "DTS SUPERVISORY CONTROLS AND INDICATIONS" PLANS FOR THE VARIOUS TCR LOCATIONS.
2. ONE TWISTED PAIR OF THE DTS CABLE TO EACH DTS INTERFACE JUNCTION BOX SHALL BE USED FOR THE TC MAINTENANCE TELEPHONE CIRCUIT.
3. ONE TWISTED PAIR IN MULTI-PAIR SPECIAL CONTROL AND INDICATION CABLE TO TC/COMM INTERFACE CABINET. SEE TC/COM INTERFACE CABINET DRAWINGS FOR TERMINATIONS.

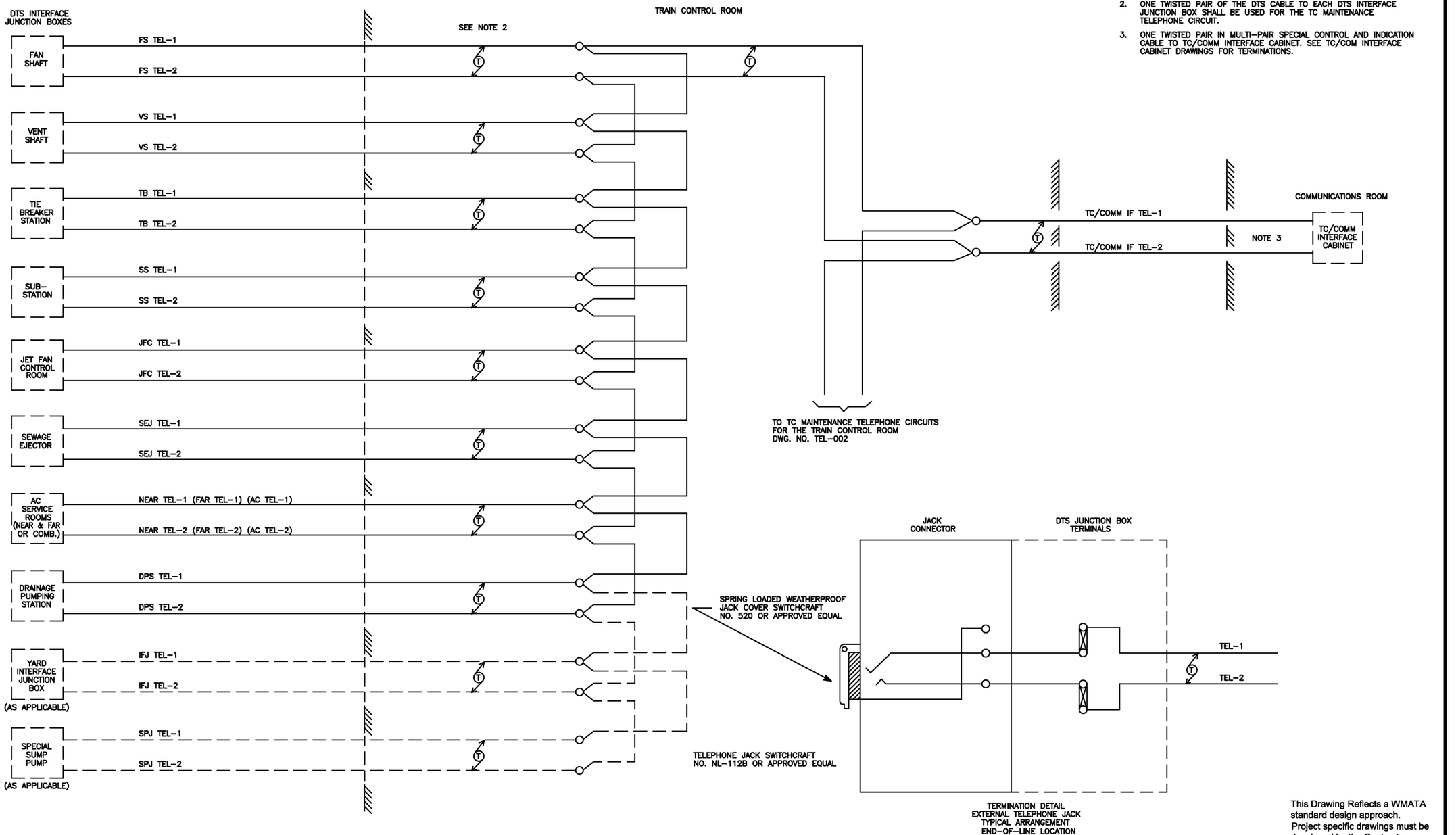

This Drawing Reflects a WMATA standard design approach. Project specific drawings must be developed by the Contractor which reflect this Design Philosophy

DESIGNED	GAH	2-00 DATE
DRAWN	JMR	2-00 DATE
CHECKED		DATE
APPROVED		DATE
UPDATED		DATE

REFERENCE DRAWINGS

NUMBER	DESCRIPTION

REVISIONS

DATE	BY	DESCRIPTION
08/2001	SYSP	Revised and issued by the Authority

WASHINGTON METROPOLITAN AREA TRANSIT AUTHORITY

DEPARTMENT OF TRANSIT SYSTEM DEVELOPMENT
OFFICE OF SYSTEMS

SUBMITTED _____ DATE

APPROVED _____ DIRECTOR May 3, 2001 DATE

TYP. TC MAINT. TEL CIRCUITS – FOR DTS INTERFACE JUNCTION BOXES AND TC/COMM INTERFACE CABINET

SHEET 3

SCALE: NONE

DRAWING NO.: ST-TC-TEL-003

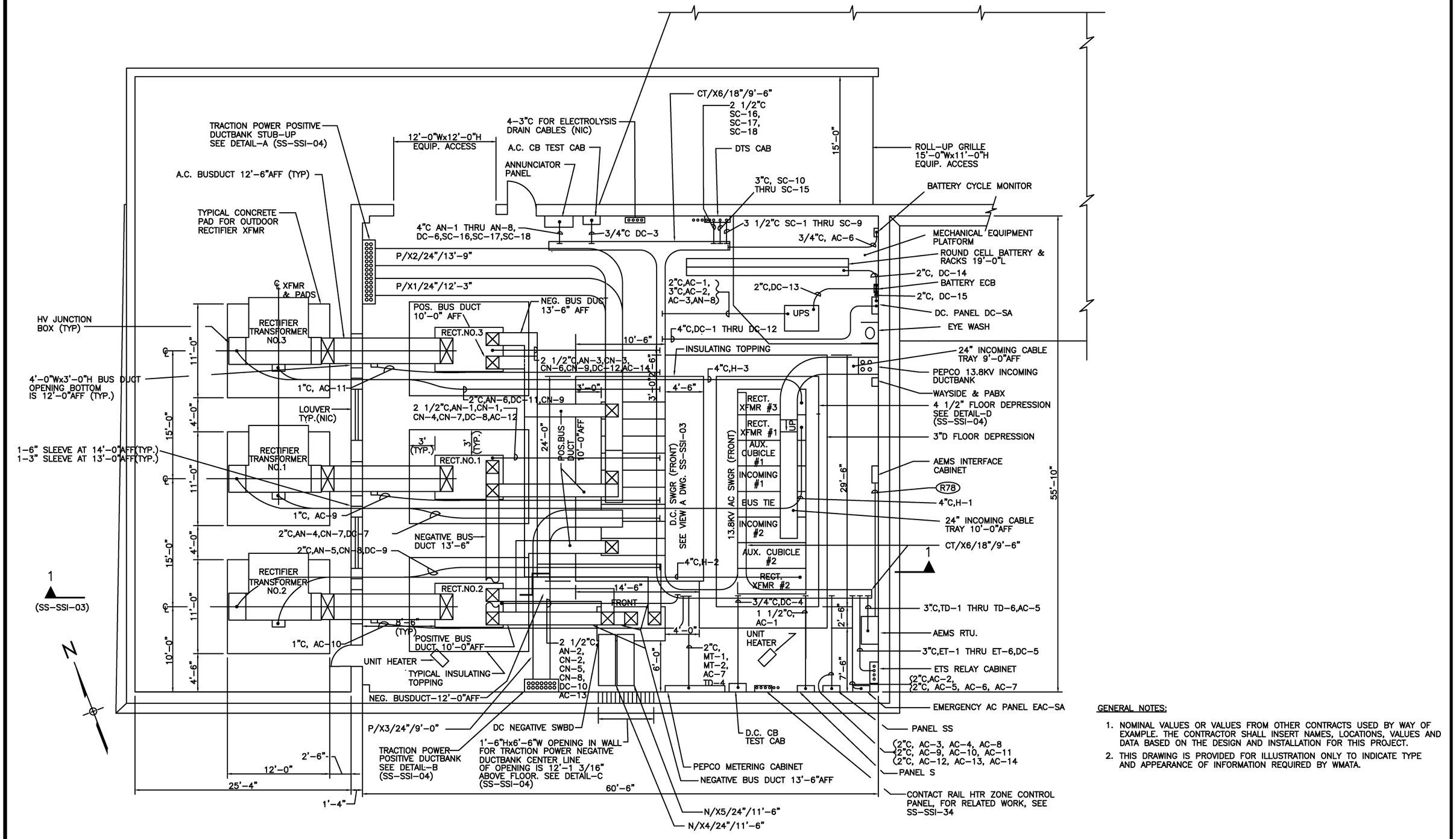

GENERAL NOTES:

1. NOMINAL VALUES OR VALUES FROM OTHER CONTRACTS USED BY WAY OF EXAMPLE. THE CONTRACTOR SHALL INSERT NAMES, LOCATIONS, VALUES AND DATA BASED ON THE DESIGN AND INSTALLATION FOR THIS PROJECT.
2. THIS DRAWING IS PROVIDED FOR ILLUSTRATION ONLY TO INDICATE TYPE AND APPEARANCE OF INFORMATION REQUIRED BY WMATA.

DESIGNED P.K. ROY 2-01 DATE
DRAWN R. THOMAS, JR. 2-01 DATE
CHECKED D. GLEN 2-01 DATE
APPROVED R. GANERIWAL 2-01 DATE

REFERENCE DRAWINGS

NUMBER	DESCRIPTION

REVISIONS

DATE	BY	DESCRIPTION
08/2001	SYSP	Revised and issued by the Authority

WASHINGTON METROPOLITAN AREA TRANSIT AUTHORITY

DEPARTMENT OF TRANSIT SYSTEM DEVELOPMENT
OFFICE OF SYSTEMS

SUBMITTED DATE

APPROVED DIRECTOR May 3, 2001 DATE

TRACTION POWER SITE SPECIFIC DWG
13.8kV ABOVE GROUND REMOTE TPS
CONDUIT & CABLE TRAY PLAN

SCALE 3/16"=1'-0"

DRAWING NO. ST-TP-SSI-001

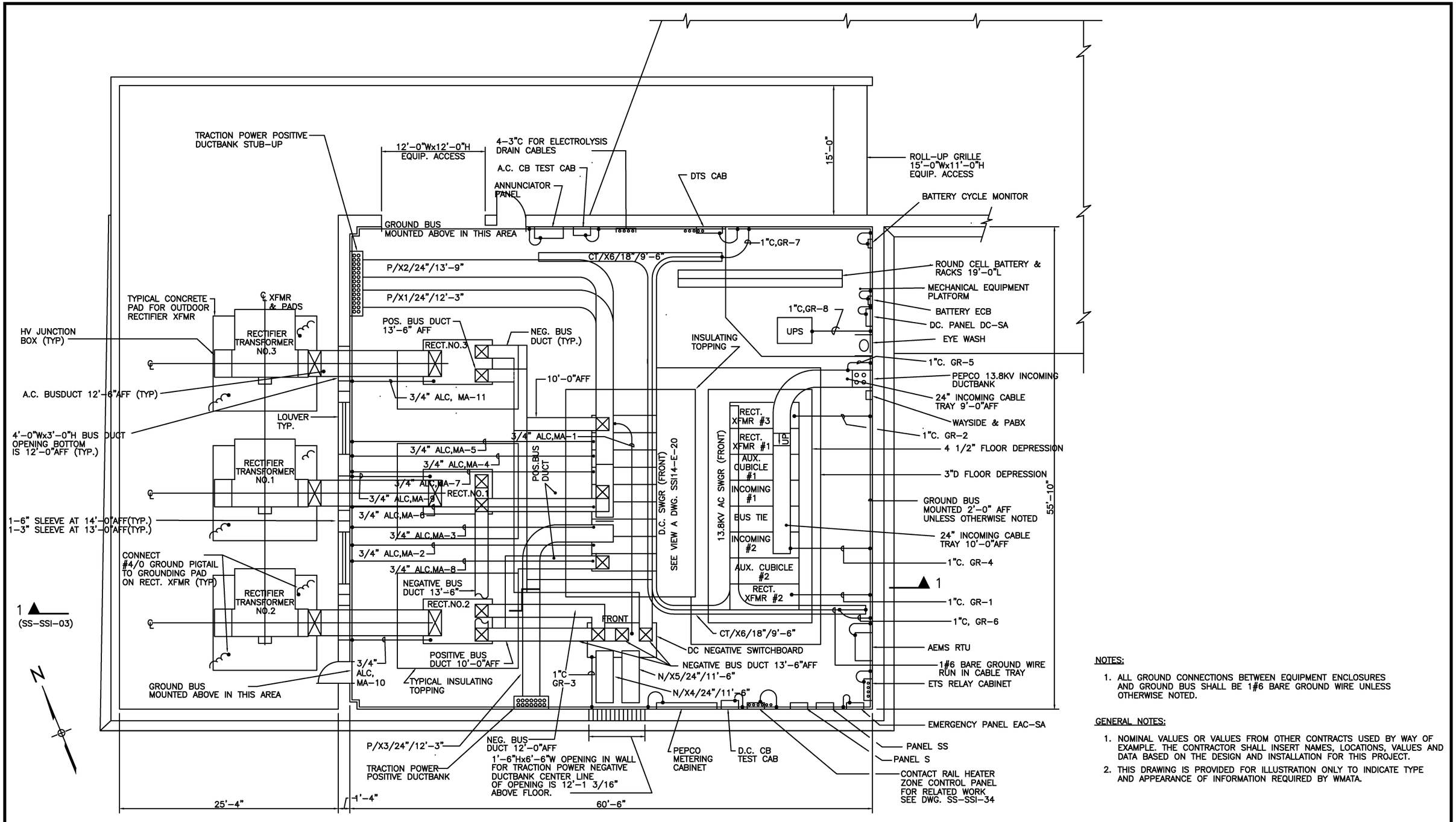

NOTES:

1. ALL GROUND CONNECTIONS BETWEEN EQUIPMENT ENCLOSURES AND GROUND BUS SHALL BE 1#6 BARE GROUND WIRE UNLESS OTHERWISE NOTED.

GENERAL NOTES:

1. NOMINAL VALUES OR VALUES FROM OTHER CONTRACTS USED BY WAY OF EXAMPLE. THE CONTRACTOR SHALL INSERT NAMES, LOCATIONS, VALUES AND DATA BASED ON THE DESIGN AND INSTALLATION FOR THIS PROJECT.
2. THIS DRAWING IS PROVIDED FOR ILLUSTRATION ONLY TO INDICATE TYPE AND APPEARANCE OF INFORMATION REQUIRED BY WMATA.

DESIGNED J. KROLIK	2-01 DATE	
DRAWN L. POWELL	2-01 DATE	
CHECKED D. GLEN	2-01 DATE	
APPROVED R. GANERIWAL	2-01 DATE	

REFERENCE DRAWINGS

NUMBER	DESCRIPTION

REVISIONS

DATE	BY	DESCRIPTION
08/2001	SYSP	Revised and issued by the Authority

WASHINGTON METROPOLITAN AREA TRANSIT AUTHORITY

DEPARTMENT OF TRANSIT SYSTEM DEVELOPMENT
OFFICE OF SYSTEMS

SUBMITTED _____ DATE

APPROVED _____ DIRECTOR May 3, 2001 DATE

TRACTION POWER SITE SPECIFIC DWG
13.8kV ABOVE GROUND REMOTE TPS GROUNDING PLAN

SCALE 3/16"=1'-0"

DRAWING NO. ST-TP-SSI-002

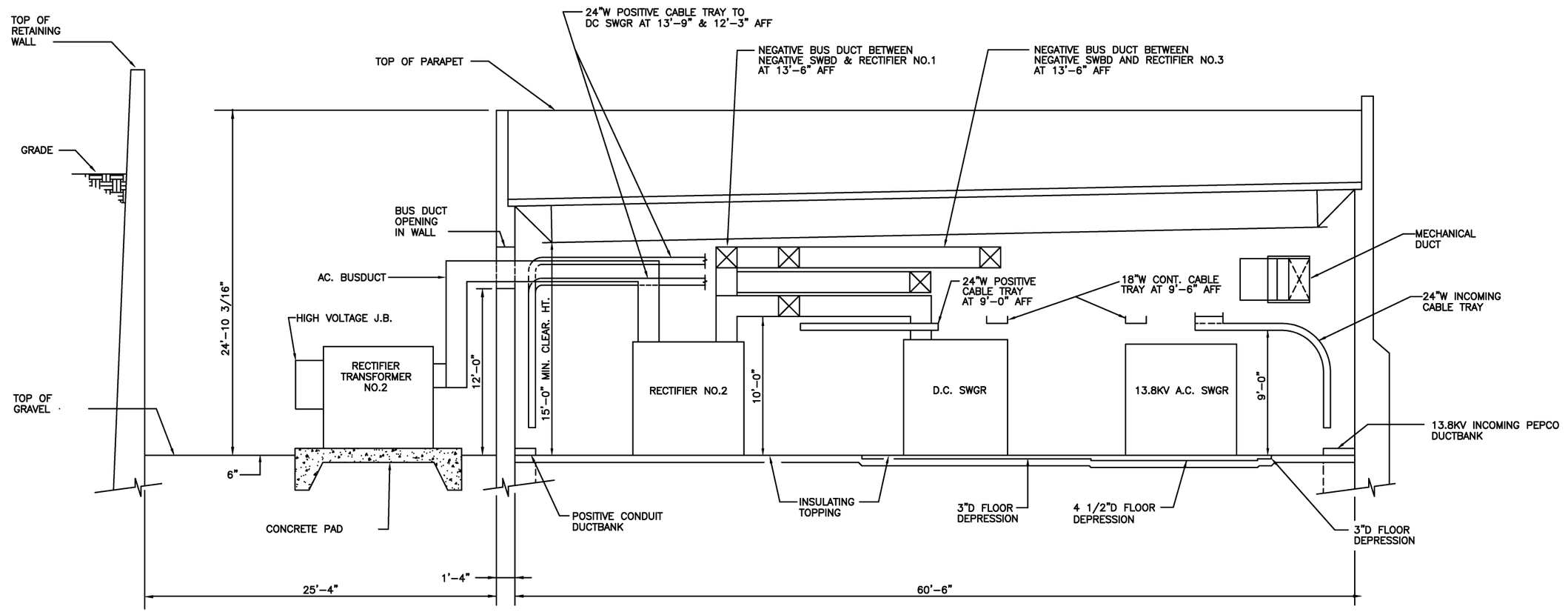

SECTION 1–1
(SS–SSI–01)

GENERAL NOTES:

1. NOMINAL VALUES OR VALUES FROM OTHER CONTRACTS USED BY WAY OF EXAMPLE. THE CONTRACTOR SHALL INSERT NAMES, LOCATIONS, VALUES AND DATA BASED ON THE DESIGN AND INSTALLATION FOR THIS PROJECT.
2. THIS DRAWING IS PROVIDED FOR ILLUSTRATION ONLY TO INDICATE TYPE AND APPEARANCE OF INFORMATION REQUIRED BY WMATA.

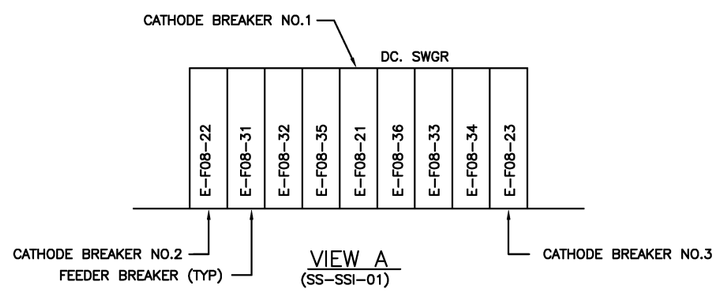

VIEW A
(SS–SSI–01)

DESIGNED	P.K. ROY	2–01 DATE
DRAWN	R. THOMAS, JR.	2–01 DATE
CHECKED	D. GLEN	2–01 DATE
APPROVED	R. GANERIWAL	2–01 DATE

REFERENCE DRAWINGS

NUMBER	DESCRIPTION

REVISIONS

DATE	BY	DESCRIPTION
08/2001	SYSP	Revised and issued by the Authority

WASHINGTON METROPOLITAN AREA TRANSIT AUTHORITY

DEPARTMENT OF TRANSIT SYSTEM DEVELOPMENT
OFFICE OF SYSTEMS

SUBMITTED _____ DATE

APPROVED _____ DIRECTOR May 3, 2001 DATE

TRACTION POWER SITE SPECIFIC DWG
13.8kV ABOVE GROUND REMOTE TPS SECTIONS

SCALE 1/4"=1'-0"

DRAWING NO. ST–TP–SSI–003

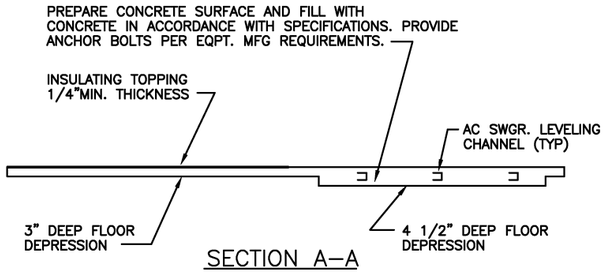

SECTION A–A

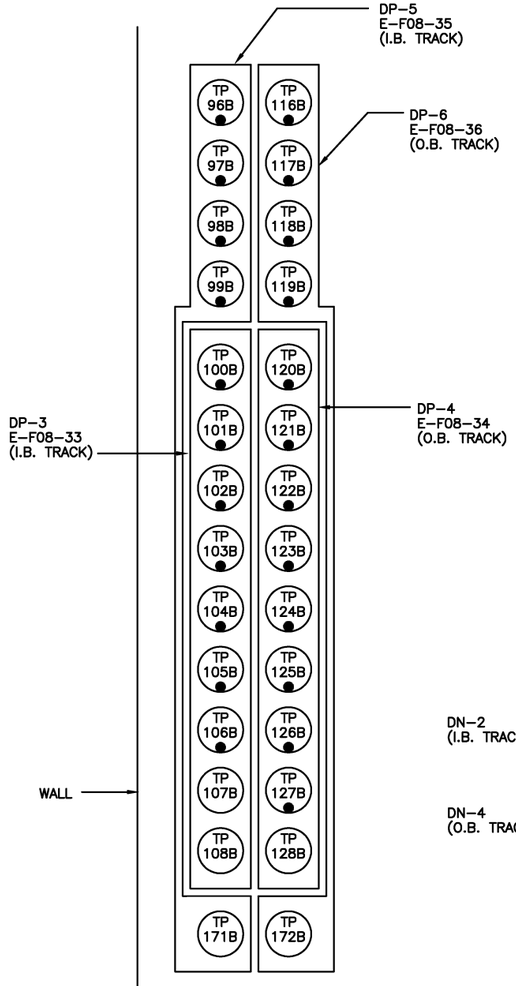

DETAIL–A
TRACTION POWER (POS) CONDUIT
STUB UP PLAN
(SS–SSI–01)

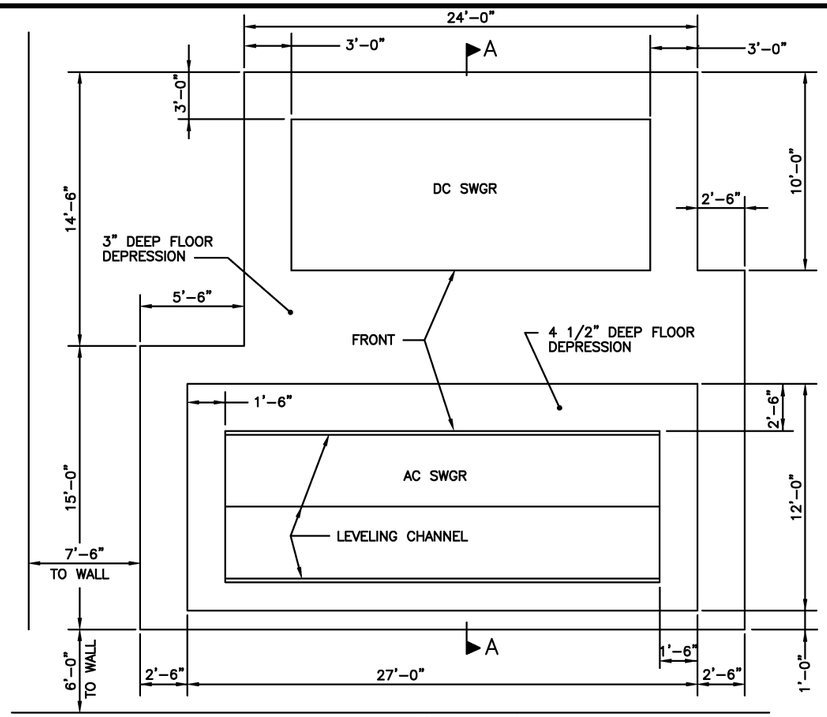

DETAIL–D
DEPRESSED FLOOR AREA PARTIAL PLAN
(SS–SSI–01)

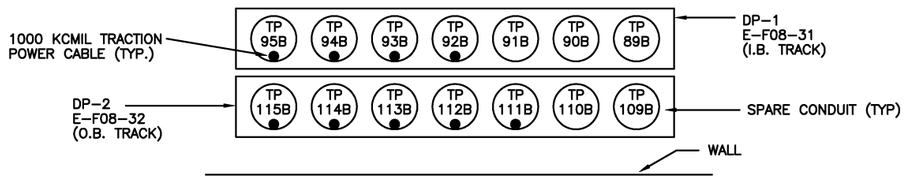

DETAIL–B
TRACTION POWER (POS) CONDUIT
STUB UP PLAN
(SS–SSI–01)

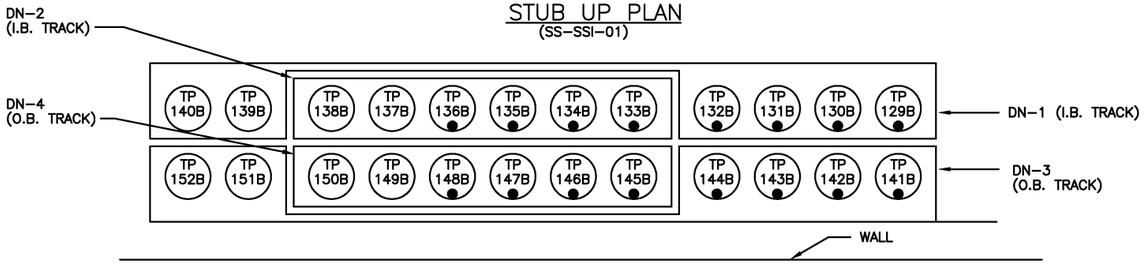

DETAIL–C
TRACTION POWER (NEG) CONDUIT
STUB UP PLAN
(SS–SSI–01)

PANEL NAME: EAC–SA							LOCATION: TRACTION POWER SUBSTATION		
RATING: 208/120V AC, 3ø 4W 100A MAINS, 10,000 AIC BKRS. AT 120V AC				GRD BUS			MAIN CKT. BKR: 50A SURFACE MOUNTING		
SERVES EQUIPMENT	LOAD KVA	CKT. BKR. TRIP	CKT. BKR. No.				CKT. BKR. No.	CKT. BKR. TRIP	LOAD KVA	SERVES EQUIPMENT
AEMS RTU	0.2	20	1				2	20	0.1	BATTERY CYCLE MONITOR
PEPCO METERING PANEL	0.1	20	3				4	20	–	SPARE
SPARE	–	20	5				6	20	–	SPARE
SPARE	–	20	7				8	20	–	SPARE
SPARE	–	20	9				10	20	–	SPARE
SUBTOTAL	0.3			SUBTOTAL					0.1	
TOTAL	0.4 KVA									

PANEL NAME: DC–SA							LOCATION: TRACTION POWER SUBSTATION		
RATING: 125V DC, 2W 225A MAINS 10,000 AIC BKRS. AT 125V DC							125A MAIN CKT. BKR. SURFACE MOUNTING		
SERVES EQUIPMENT	LOAD KVA	CKT. BKR. TRIP	CKT. BKR. No.				CKT. BKR. No.	CKT. BKR. TRIP	LOAD KVA	SERVES EQUIPMENT
AC SWGR. CONT. POWER	0.65	60	1				2	60	1.6	DC SWGR, CONT. POWER
AC CKT, BKR. TEST CAB	–	30	3				4	30	–	DC CKT, BKR. TEST CAB.
EMERG. TRIP SW, RELAY CAB.	0.1	30	5				6	30	–	SPARE
ANNUNCIATOR PANEL	1.0	20	7				8	20	–	ZONEHTR. CONT. PNL.
RECT. TRANS No.1 CONT. POWER	0.2	20	9				10	20	0.05	RECT. No.1 CONT. POWER
RECT. TRANS No.2 CONT. POWER	0.2	20	11				12	20	0.05	RECT. No.2 CONT. POWER
RECT. TRANS No.3 CONT. POWER	0.2	20	13				14	20	0.05	RECT. No.3 CONT. POWER
SPARE	–	20	15				16	20	–	SPARE
SUBTOTAL	2.35			SUBTOTAL					1.75	
CONN. LOAD: 4.1 KVA				SPARE: 0.9 KVA					TOTAL: 5.0 KVA	

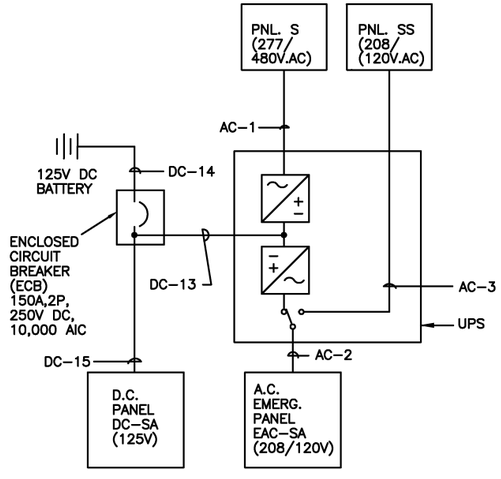

UPS ONE LINE DIAGRAM

GENERAL NOTES:

1. NOMINAL VALUES OR VALUES FROM OTHER CONTRACTS USED BY WAY OF EXAMPLE. THE CONTRACTOR SHALL INSERT NAMES, LOCATIONS, VALUES AND DATA BASED ON THE DESIGN AND INSTALLATION FOR THIS PROJECT.
2. THIS DRAWING IS PROVIDED FOR ILLUSTRATION ONLY TO INDICATE TYPE AND APPEARANCE OF INFORMATION REQUIRED BY WMATA.

DESIGNED P.K. ROY 2–01 DATE
DRAWN L. POWELL 2–01 DATE
CHECKED D. GLEN 2–01 DATE
APPROVED R. GANERIWALL 2–01 DATE

REFERENCE DRAWINGS

NUMBER	DESCRIPTION

REVISIONS

DATE	BY	DESCRIPTION
08/2001	SYSP	Revised and issued by the Authority

WASHINGTON METROPOLITAN AREA TRANSIT AUTHORITY

DEPARTMENT OF TRANSIT SYSTEM DEVELOPMENT
OFFICE OF SYSTEMS

SUBMITTED _____ DATE

APPROVED DIRECTOR _____ May 3, 2001 DATE

TRACTION POWER SITE SPECIFIC DWG
13.8kV ABOVE GROUND REMOTE TPS
MISCELLANEOUS DETAILS

SCALE NONE

DRAWING NO. ST–TP–SSI–004

CABLE					CIRCUIT					ROUTING				
NUMBER	CONSTRUCT.	SIZE AWG.	INSULATION VOLTAGE	INSULATION TYPE	VOLTAGE	A.C. OR D.C.	CURRENT	SPARE COND.		FROM	VIA	TO	FOR	REV. NO.
H–1	3–1/C 1–1/C	#4/0 #2	15KV 600V	90° C	13.8KV GR. GRD.	AC		0		15KV RECT XFMR No.1 FDR BKR	CONDUIT	RECTIFIER TRANSFORMER #1	TRANSFORMER #1 PRIMARY LEADS	0
H–2	3–1/C 1–1/C	#4/0 #2	15KV 600V	90° C	13.8KV GR. GRD.	AC		0		15KV RECT XFMR No.2 FDR BKR	CONDUIT	RECTIFIER TRANSFORMER #2	TRANSFORMER #2 PRIMARY LEADS	0
H–3	3–1/C 1–1/C	#4/0 #2	15KV 600V	90° C	13.8KV GR. GRD.	AC		0		15KV RECT XFMR No.3 FDR BKR	CONDUIT	RECTIFIER TRANSFORMER #3	TRANSFORMER #3 PRIMARY LEADS	0
DP–1	4–1/C	1000 KCMIL	2000V	90° C	700V	DC		0		DC FDR BKR No.1 (E–F08–31)	CABLE TRAY X3 & CONDUIT	CONTACT RAIL IB END APPR. 301+86.57	TRACTION POWER FEEDER	0
DP–2	5–1/C	1000 KCMIL	2000V	90° C	700V	DC		0		DC FDR BKR No.2 (E–F08–32)	CABLE TRAY X3 & CONDUIT	CONTACT RAIL OB END APPR. 301+86.57	TRACTION POWER FEEDER	0
DP–3	7–1/C	1000 KCMIL	2000V	90° C	700V	DC		0		DC FDR BKR No.3 (E–F08–33)	CABLE TRAY XI & CONDUIT	CONTACT RAIL IB END APPR. 303+26.57	TRACTION POWER FEEDER	0
DP–4	8–1/C	1000 KCMIL	2000V	90° C	700V	DC		0		DC FDR BKR No.4 (E–F08–34)	CABLE TRAY XI & CONDUIT	CONTACT RAIL OB END APPR. 303+26.57	TRACTION POWER FEEDER	0
DP–5	4–1/C	1000 KCMIL	2000V	90° C	700V	DC		0		DC FDR BKR No.5 (E–F08–35)	CABLE TRAY X2 & CONDUIT	CONTACT RAIL IB END APPR. 302+18.57	TRACTION POWER FEEDER	0
DP–6	4–1/C	1000 KCMIL	2000V	90° C	700V	DC		0		DC FDR BKR No.6 (E–F08–36)	CABLE TRAY X2 & CONDUIT	CONTACT RAIL OB END APPR. 302+18.57	TRACTION POWER FEEDER	0
DN–1	4–1/C	1000 KCMIL	2000V	90° C	700V	DC		0		NEGATIVE SWBD SWITCH No.1	CABLE TRAY X4 & CONDUIT	IMP. BOND IB STA. 301+76.57	NEGATIVE RETURN FDR	0
DN–2	4–1/C	1000 KCMIL	2000V	90° C	700V	DC		0		NEGATIVE SWBD SWITCH No.2	CABLE TRAY X4 & CONDUIT	IMP. BOND IB STA. 301+76.57	NEGATIVE RETURN FDR	0
DN–3	4–1/C	1000 KCMIL	2000V	90° C	700V	DC		0		NEGATIVE SWBD SWITCH No.3	CABLE TRAY X5 & CONDUIT	IMP. BOND OB STA. 301+76.57	NEGATIVE RETURN FDR	0
DN–4	4–1/C	1000 KCMIL	2000V	90° C	700V	DC		0		NEGATIVE SWBD SWITCH No.4	CABLE TRAY X5 & CONDUIT	IMP. BOND OB STA. 301+76.57	NEGATIVE RETURN FDR	0
AN–1	19/C	#14	600V	90° C	125V	DC				RECTIFIER No.1	CABLE TRAY X6, & CONDUIT	ANNUNCIATOR PANEL	PROTECTIVE DEVICE OPER. INDICATION	0
AN–2	19/C	#14	600V	90° C	125V	DC				RECTIFIER No.2	CABLE TRAY X6, & CONDUIT	ANNUNCIATOR PANEL	PROTECTIVE DEVICE OPER. INDICATION	0
AN–3	19/C	#14	600V	90° C	125V	DC				RECTIFIER No.3	CABLE TRAY X6, & CONDUIT	ANNUNCIATOR PANEL	PROTECTIVE DEVICE OPER. INDICATION	0
AN–4	7/C	#14	600V	90° C	125V	DC				RECTIFIER TRANSFORMER #1	CABLE TRAY X6, & CONDUIT	ANNUNCIATOR PANEL	PROTECTIVE DEVICE OPER. INDICATION	0
AN–5	7/C	#14	600V	90° C	125V	DC				RECTIFIER TRANSFORMER #2	CABLE TRAY X6, & CONDUIT	ANNUNCIATOR PANEL	PROTECTIVE DEVICE OPER. INDICATION	0
AN–6	7/C	#14	600V	90° C	125V	DC				RECTIFIER TRANSFORMER #3	CABLE TRAY X6, & CONDUIT	ANNUNCIATOR PANEL	PROTECTIVE DEVICE OPER. INDICATION	0
AN–7	9/C	#14	600V	90° C	125V	DC				DC CATH BKR No.2 (E–F08–22)	CABLE TRAY X6, & CONDUIT	ANNUNCIATOR PANEL	PROTECTIVE DEVICE OPER. INDICATION	0
AN–8	9/C	#14	600V	90° C	125V	DC				UPS	CABLE TRAY X6, & CONDUIT	ANNUNCIATOR PANEL	STATUS INDICATOR	0

CABLE					CIRCUIT					ROUTING				
NUMBER	CONSTRUCT.	SIZE AWG.	INSULATION VOLTAGE	INSULATION TYPE	VOLTAGE	A.C. OR D.C.	CURRENT	SPARE COND.		FROM	VIA	TO	FOR	REV. NO.
SC–1	7/C	#14	600V	90° C	24V	DC		3		DC CATH BKR No.1(E–F08–21)	CABLE TRAY X6 & CONDUIT	DTS CABINET	DC CATH. BKR. No.1 IND.	0
SC–2	7 /C	#14	600V	90° C	24V	DC		3		DC CATH BKR No.2(E–F08–22)	CABLE TRAY X6 & CONDUIT	DTS CABINET	DC CATH. BKR. No.2 IND.	0
SC–3	7/C	#14	600V	90° C	24V	DC		3		DC CATH BKR No.3(E–F08–23)	CABLE TRAY X6 & CONDUIT	DTS CABINET	DC CATH. BKR. No.3 IND.	0
SC–4	12/C	#14	600V	90° C	24V	DC		4		DC FDR BKR No.1(E–F08–31)	CABLE TRAY X6 & CONDUIT	DTS CABINET	DC FDR BKR NO.1 CONT/IND.	0
SC–5	12/C	#14	600V	90° C	24V	DC		4		DC FDR BKR No.2(E–F08–32)	CABLE TRAY X6 & CONDUIT	DTS CABINET	DC FDR BKR. No.2 CONT/IND	0
SC–6	12/C	#14	600V	90° C	24V	DC		4		DC FDR BKR No.3(E–F08–33)	CABLE TRAY X6 & CONDUIT	DTS CABINET	DC FDR BKR. No.3 CONT/IND	0
SC–7	12/C	#14	600V	90° C	24V	DC		4		DC FDR BKR No.4(E–F08–34)	CABLE TRAY X6 & CONDUIT	DTS CABINET	DC FDR BKR. No.4 CONT/IND	0
SC–8	12/C	#14	600V	90° C	24V	DC		4		DC FDR BKR No.5(E–F08–35)	CABLE TRAY X6 & CONDUIT	DTS CABINET	DC FDR BKR. No.5 CONT/IND	0
SC–9	12/C	#14	600V	90°C	24V	DC		4		DC FDR BKR No.6(E–F08–36)	CABLE TRAY X6 & CONDUIT	DTS CABINET	DC FDR BKR. No.6 CONT/IND	0
SC–10	19/C	#14	600V	90° C	24V	DC		3		15KV INC LINE No.1 BKR	CABLE TRAY X6 & CONDUIT	DTS CABINET	INC. LINE #1 BKR CONT/IND.	0
SC–11	19/C	#14	600V	90° C	24V	DC		3		15KV INC LINE No.2 BKR	CABLE TRAY X6 & CONDUIT	DTS CABINET	INC. LINE #2 BKR CONT/IND.	0
SC–12	19/C	#14	600V	90° C	24V	DC		7		15KV BUS TIE BKR	CABLE TRAY X6 & CONDUIT	DTS CABINET	BUS TIE BKR. CONT/IND.	0
SC–13	19/C	#14	600V	90°C	24V	DC		7		15KV RECT XFMR No.1 FDR BKR	CABLE TRAY X6 & CONDUIT	DTS CABINET	RECT.XFMR#1 FDR BKR CONT/IND.	0
SC–14	19/C	#14	600V	90° C	24V	DC		7		15KV RECT XFMR No.2 FDR BKR	CABLE TRAY X6 & CONDUIT	DTS CABINET	RECT.XFMR#2 FDR BKR. CONT/IND.	0
SC–15	19/C	#14	600V	90° C	24V	DC		7		15KV RECT XFMR No.3 FDR BKR	CABLE TRAY X6 & CONDUIT	DTS CABINET	RECT.XFMR#3 FDR BKR CONT/IND.	0
SC–16	19/C	#14	600V	90° C	24V	DC		1		ANNUNCIATOR PANEL	CABLE TRAY X6 & CONDUIT	DTS CABINET	SUPV. ALARM RECT. & RECT. XFMR #1 & 2	0
SC–17	12/C	#14	600V	90° C	24V	DC		3		ANNUNCIATOR PANEL	CABLE TRAY X6 & CONDUIT	DTS CABINET	SUPV. ALARM RECT. & RECT. XFMR #3	0
SC–18	19/C	#14	600V	90° C	24V	DC		7		ANNUNCIATOR PANEL	CABLE TRAY X6 & CONDUIT	DTS CABINET	SUPV. ALARM UPS SYSTEM	0
MT–1	7/C	#14	600V	90°C	120V	AC				15KV SWGR AUX CUBICLE #1	CABLE TRAY X6 AND CONDUIT	PEPCO METER PANEL	METERING	
MT–2	7/C	#14	600V	90°C	120V	AC				15KV SWGR AUX CUBICLE #2	CABLE TRAY X6 AND CONDUIT	PEPCO METER PANEL	METERING	

H – A.C. PRIMARY VOLTAGE CABLE
DP – D.C. POSITIVE POWER CABLE
DN – D.C. NEGATIVE POWER CABLE
DD – D.C. UTILITY DRAIN CABLE

AN – ANNUNCIATOR CABLE
SC – SUPERVISORY CONTROL CABLE
ET – EMERGENCY TRIP CABLE
MT – METERING & INSTRUMENTATION CABLE

CN – OPERATING CONTROL CABLE
MA – MISCELLANEOUS CIRCUITS
AC – A.C. LOW VOLTAGE POWER CIRCUITS
DC – D.C. CONTROL POWER CIRCUITS

GENERAL NOTES:

1. NOMINAL VALUES OR VALUES FROM OTHER CONTRACTS USED BY WAY OF EXAMPLE. THE CONTRACTOR SHALL INSERT NAMES, LOCATIONS, VALUES AND DATA BASED ON THE DESIGN AND INSTALLATION FOR THIS PROJECT.
2. THIS DRAWING IS PROVIDED FOR ILLUSTRATION ONLY TO INDICATE TYPE AND APPEARANCE OF INFORMATION REQUIRED BY WMATA.

DESIGNED J. KROLIK 2–01 DATE
DRAWN L. POWELL 2–01 DATE
CHECKED D. GLEN 2–01 DATE
APPROVED R. GANERIWAL 2–01 DATE

REFERENCE DRAWINGS

NUMBER	DESCRIPTION

REVISIONS

DATE	BY	DESCRIPTION
08/2001	SYSP	Revised and issued by the Authority

WASHINGTON METROPOLITAN AREA TRANSIT AUTHORITY

DEPARTMENT OF TRANSIT SYSTEM DEVELOPMENT
OFFICE OF SYSTEMS

SUBMITTED _____ DATE

APPROVED _____ DIRECTOR May 3, 2001 DATE

TRACTION POWER SITE SPECIFIC DWG
13.8kV ABOVE GROUND REMOTE TPS
CABLE SCHEDULE – SHEET 1

SCALE NONE

DRAWING NO. ST–TP–SSI–005

CABLE					CIRCUIT					ROUTING					CABLE					CIRCUIT					ROUTING				
NUMBER	CONSTRUCT.	SIZE AWG.	INSULATION VOLTAGE	INSULATION TYPE	VOLTAGE	A.C. OR D.C.	CURRENT	SPARE COND.		FROM	VIA	TO	FOR	REV. NO.	NUMBER	CONSTRUCT.	SIZE AWG.	INSULATION VOLTAGE	INSULATION TYPE	VOLTAGE	A.C. OR D.C.	CURRENT	SPARE COND.	GRD COND. SIZE	FROM	VIA	TO	FOR	REV. NO.
ET–1	4/C	#10	600V	90°C	125V	D.C.		2		EMERG.TRIP SW RELAY CAB.	CABLE TRAY X6 & CONDUIT	D.C.FDR BKR No.1 (E–F08–31)	CONTACT RAIL EMERG. TRIP	0																
ET–2	4/C	#10	600V	90°C.	125V	D.C.		2		EMERG.TRIP SW RELAY CAB.	CABLE TRAY X6 & CONDUIT	D.C.FDR BKR No.2 (E–F08–32)	CONTACT RAIL EMERG. TRIP	0																
ET–3	4/C	#10	600V	90°C.	125V	D.C.		2		EMERG.TRIP SW RELAY CAB.	CABLE TRAY X6 & CONDUIT	D.C.FDR BKR No.3 (E–F08–33)	CONTACT RAIL EMERG. TRIP	0																
ET–4	4/C	#10	600V	90°C	125V	D.C.		2		EMERG.TRIP SW RELAY CAB.	CABLE TRAY X6 & CONDUIT	D.C.FDR BKR No.4 (E–F08–34)	CONTACT RAIL EMERG. TRIP	0																
ET–5	4/C	#10	600V	90°C	125V	D.C.		2		EMERG.TRIP SW RELAY CAB.	CABLE TRAY X6 & CONDUIT	D.C.FDR BKR No.5 (E–F08–35)	CONTACT RAIL EMERG. TRIP	0																
ET–6	4/C	#10	600V	90°C	125V	D.C.		2		EMERG.TRIP SW. RELAY CAB.	CABLE TRAY X6 & CONDUIT	D.C.FDR BKR No.6 (E–F08–36)	CONTACT RAIL EMERG.TRIP	0																
CN–1	7/C	#14	600V	90°C	125V	DC				RECTIFIER No.1	CABLE TRAY X6 & CONDUIT	DC CATH BKR NO.1 (E–F08–21)	RECT PROTECTIVE DEVICE TRIPPING	0																
CN–2	7/C	#14	600V	90°C	125V	DC				RECTIFIER No.2	CABLE TRAY X6 & CONDUIT	DC CATH BKR NO.2 (E–F08–22)	RECT PROTECTIVE DEVICE TRIPPING	0																
CN–3	7/C	#14	600V	90°C	125V	DC				RECTIFIER No.3	CABLE TRAY X6 & CONDUIT	DC CATH BKR NO.3 (E–F08–23)	RECT PROTECTIVE DEVICE TRIPPING	0																
CN–4	19/C	#14	600V	90°C	125V	DC				RECTIFIER No.1	CABLE TRAY X6 & CONDUIT	15KV RECT XFMR NO.1 FDR BKR	RECT PROTECTIVE DEVICE TRIPPING	0	DC–1	2/C	#6	600V	90°C	125V	DC		0		DC PANEL DC–SA CKT NO.1	CABLE TRAY X6, & CONDUIT	15KV INC LINE NO.1 BKR	15KV SWGR CONTROL POWER	0
CN–5	19/C	#14	600V	90°C	125V	DC				RECTIFIER No.2	CABLE TRAY X6 & CONDUIT	15KV RECT XFMR NO.2 FDR BKR	RECT PROTECTIVE DEVICE TRIPPING	0	DC–2	2/C	#6	600V	90°C	125V	DC		0		DC PANEL DC–SA CKT NO.2	CABLE TRAY X6, & CONDUIT	DC CATH BKR NO.1 (E–F08–21)	750V DC SWGR CONTROL POWER	0
CN–6	19/C	#14	600V	90°C	125V	DC				RECTIFIER NO.3	CABLE TRAY X6 & CONDUIT	15KV RECT XFMR NO.3 FDR BKR	RECT PROTECTIVE DEVICE TRIPPING	0	DC–3	2/C	#10	600V	90°C	125V	DC		0		DC PANEL DC–SA CKT NO.3	CABLE TRAY X6, & CONDUIT	AC CB TEST CABINET	DC SUPPLY	0
CN–7	5/C	#14	600V	90°C	125V	DC				RECT. XFMR NO.1	CABLE TRAY X6 & CONDUIT	RECTIFIER NO.1	RECT PROTECTIVE DEVICE TRIPPING	0	DC–4	2/C	#10	600V	90°C	125V	DC		0		DC PANEL DC–SA CKT NO.4	CABLE TRAY X6, & CONDUIT	DC CB TEST CABINET	DC SUPPLY	0
CN–8	5/C	#14	600V	90°C	125V	DC				RECT. XFMR NO.2	CABLE TRAY X6 & CONDUIT	RECTIFIER NO.2	RECT PROTECTIVE DEVICE TRIPPING	0	DC–5	2/C	#10	600V	90°C	125V	DC		0		DC PANEL DC–SA CKT NO.5	CABLE TRAY X6, & CONDUIT	ETS RELAY CAB	DC CONTROL POWER	0
CN–9	5/C	#14	600V	90°C	125V	DC				RECT. XFMR NO.3	CABLE TRAY X6 & CONDUIT	RECTIFIER NO.3	RECT PROTECTIVE DEVICE TRIPPING	0	DC–6	2/C	#12	600V	90°C	125V	DC		0		DC PANEL DC–SA CKT NO.7	CABLE TRAY X6, & CONDUIT	ANNUNCIATOR PANEL	DC CONTROL POWER	0
CN–10	9/C	#14	600V	90°C	125V	DC				15KV RECT XFMR NO.1 FDR BKR	CABLE TRAY X6,	DC CATH BKR No.1 (E–F08–21)	AC–DC BREAKER INTERLOCK	0	DC–7	2/C	#12	600V	90°C	125V	DC		0		DC PANEL DC–SA CKT NO.9	CABLE TRAY X6, & CONDUIT	RECT XFMR NO.1	DC CONTROL POWER	0
CN–11	9/C	#14	600V	90°C	125V	DC				15KV RECT XFMR NO.2 FDR BKR	CABLE TRAY X6	DC CATH BKR No.2 (E–F08–22)	AC–DC BREAKER INTERLOCK	0	DC–8	2/C	#12	600V	90°C	125V	DC		0		DC PANEL DC–SA CKT NO.10	CABLE TRAY X6, & CONDUIT	RECTIFIER NO.1	DC CONTROL POWER	0
CN–12	9/C	#14	600V	90°C	125V	DC				15KV RECT XFMR NO.3 FDR BKR	CABLE TRAY X6	DC CATH BKR No.3 (E–F08–23)	AC–DC BREAKER INTERLOCK	0	DC–9	2/C	#12	600V	90°C	125V	DC		0		DC PANEL DC–SA CKT NO.11	CABLE TRAY X6, & CONDUIT	RECT XFMR NO.2	DC CONTROL POWER	0
CN–13	4/C	#14	600V	90°C	125V	DC				15KV RECT XFMR NO.1 FDR BKR	CABLE TRAY X6	DC FDR BKR No.1 (E–F08–31)	51 BX (TRIP)	0	DC–10	2/C	#12	600V	90°C	125V	DC		0		DC PANEL DC–SA CKT NO.12	CABLE TRAY X6, & CONDUIT	RECTIFIER NO.2	DC CONTROL POWER	0
CN–14	4/C	#14	600V	90°C	125V	DC				15KV RECT XFMR NO.1 FDR BKR	CABLE TRAY X6	DC FDR BKR No.2 (E–F08–32)	51 BX (TRIP)	0	DC–11	2/C	#12	600V	90°C	125V	DC		0		DC PANEL DC–SA CKT NO.13	CABLE TRAY X6, & CONDUIT	RECT XFMR NO.3	DC CONTROL POWER	0
CN–15	4/C	#14	600V	90°C	125V	DC				15KV RECT XFMR NO.1 FDR BKR	CABLE TRAY X6	DC FDR BKR No.3 (E–F08–33)	51 BX (TRIP)	0	DC–12	2/C	#12	600V	90°C	125V	DC		0		DC PANEL DC–SA CKT NO.14	CABLE TRAY X6, & CONDUIT	RECTIFIER NO.3	DC CONTROL POWER	0
CN–16	4/C	#14	600V	90°C	125V	DC				15KV RECT XFMR NO.1 FDR BKR	CABLE TRAY X6	DC FDR BKR No.4 (E–F08–34)	51 BX (TRIP)	0	DC–13	2–1/C	4/0	600V	90°C	125V	DC		0		UPS CABINET	CONDUIT	BATTERY ECB	DC FEEDER INVERTER INPUT	0
CN–17	4/C	#14	600V	90°C	125V	DC				15KV RECT XFMR NO.1 FDR BKR	CABLE TRAY X6	DC FDR BKR No.5 (E–F08–35)	51 BX (TRIP)	0	DC–14	2–1/C	4/0	600V	90°C	125V	DC		0		BATTERY	CONDUIT	BATTERY ECB	DC FEEDER	
CN–18	4/C	#14	600V	90°C	125V	DC				15KV RECT XFMR NO.1 FDR BKR	CABLE TRAY X6	DC FDR BKR No.6 (E–F08–36)	51 BX (TRIP)	0	DC–15	2–1/C	4/0	600V	90°C	125V	DC		0		BATTERY ECB	CONDUIT	DC PANEL DC–SA	DC FEEDER	0

H – A.C. PRIMARY VOLTAGE CABLE
DP – D.C. POSITIVE POWER CABLE
DN – D.C. NEGATIVE POWER CABLE
DD – D.C. UTILITY DRAIN CABLE

AN – ANNUNCIATOR CABLE
SC – SUPERVISORY CONTROL CABLE
ET – EMERGENCY TRIP CABLE
MT – METERING & INSTRUMENTATION CABLE

CN – OPERATING CONTROL CABLE
MA – MISCELLANEOUS CIRCUITS
AC – A.C. LOW VOLTAGE POWER CIRCUITS
DC – D.C. CONTROL POWER CIRCUITS

GENERAL NOTES:

1. NOMINAL VALUES OR VALUES FROM OTHER CONTRACTS USED BY WAY OF EXAMPLE. THE CONTRACTOR SHALL INSERT NAMES, LOCATIONS, VALUES AND DATA BASED ON THE DESIGN AND INSTALLATION FOR THIS PROJECT.
2. THIS DRAWING IS PROVIDED FOR ILLUSTRATION ONLY TO INDICATE TYPE AND APPEARANCE OF INFORMATION REQUIRED BY WMATA.

DESIGNED J. KROLIK 2–01 DATE
DRAWN L. POWELL 2–01 DATE
CHECKED D. GLEN 2–01 DATE
APPROVED R GANERIWAL 2–01 DATE

REFERENCE DRAWINGS

NUMBER	DESCRIPTION

REVISIONS

DATE	BY	DESCRIPTION
08/2001	SYSP	Revised and issued by the Authority

WASHINGTON METROPOLITAN AREA TRANSIT AUTHORITY

DEPARTMENT OF TRANSIT SYSTEM DEVELOPMENT
OFFICE OF SYSTEMS

SUBMITTED _____ DATE

APPROVED _____ DIRECTOR May 3, 2001 DATE

TRACTION POWER SITE SPECIFIC DWG
13.8kV ABOVE GROUND REMOTE TPS
CABLE SCHEDULE – SHEET 2

SCALE NONE

DRAWING NO. ST–TP–SSI–006

CABLE					CIRCUIT					ROUTING				
NUMBER	CONSTRUCT.	SIZE AWG.	INSULATION VOLTAGE	INSULATION TYPE	VOLTAGE	A.C. OR D.C.	CURRENT	SPARE COND.	GRD COND SIZE	FROM	VIA	TO	FOR	REV. NO.
AC-1	3/C	#8	600V	90°C	480V	AC		0	#10	480V PANEL S CKT NO.14,16,18	CABLE TRAY X6, & CONDUIT	UPS CABINET RECTIFIER INPUT	UPS CABINET POWER SUPPLY	0
AC-2	4/C	#4	600V	90°C	208V	AC		0	#10	UPS CABINET INVERTER OUTPUT	CABLE TRAY X6, & CONDUIT	EMERG. AC PANEL EAC-SA	AC POWER SUPPLY	0
AC-3	4/C	#4	600V	90°C	208V	AC		0	#10	208/120V PANEL SS CKT NO.1	CABLE TRAY X6, & CONDUIT	UPS CABINET ATS	AC STAND BY POWER SUPPLY	0
AC-4	2/C	#6	600V	90°C	120V	AC		0	#10	208/120V PANEL SS CKT NO.11	CABLE TRAY X6, & CONDUIT	15KV RECT XFMR No.1 FDR BKR	AC POWER TO 15KV SWGR. HEATER	0
AC-5	2/C	#10	600V	90°C	120V	AC		0	#12	EMERG. AC PANEL EAC-SA CKT NO.1	CABLE TRAY X6, & CONDUIT	AEMS RTU	AC POWER SUPPLY	0
AC-6	2/C	#10	600V	90°C	120V	AC		0	#12	EMERG. AC PANEL EAC-SA CKT NO.2	CABLE TRAY X6, & CONDUIT	BATTERY CYCLE MONITOR	AC POWER SUPPLY	0
AC-7	2/C	#10	600V	90°C	120V	AC		0	#12	EMERG. AC PANEL EAC-SA CKT NO.3	CABLE TRAY X6, & CONDUIT	PEPCO METERING PANEL	AC POWER SUPPLY	0
AC-8	2/C	#10	600V	90°C	120V	AC		0	#12	208/120V PANEL SS CKT NO.13	CABLE TRAY X6, & CONDUIT	DC CATH BKR No.1(E-F08-21)	AC POWER TO DC SWGR.HTR.	0
AC-9	2/C	#10	600V	90°C	120V	AC		0	#12	208/120V PANEL SS CKT NO.3	CABLE TRAY X6, & CONDUIT	RECT. XFMR #1 BUSDUCT HEATER	BUSDUCT HEATER POWER SUPPLY	0
AC-10	2/C	#10	600V	90°C	120V	AC		0	#12	208/120V PANEL SS CKT NO.5	CABLE TRAY X6, & CONDUIT	RECT. XFMR #2 BUSDUCT HEATER	BUSDUCT HEATER POWER SUPPLY	0
AC-11	2/C	#10	600V	90°C	120V	AC		0	#12	208/120V PANEL SS CKT NO.7	CABLE TRAY X6, & CONDUIT	RECT. XFMR #3 BUSDUCT HEATER	BUSDUCT HEATER POWER SUPPLY	0
AC-12	2/C	#10	600V	90°C	120V	AC		0	#12	208/120V PANEL SS CKT NO,9	CABLE TRAY X6, & CONDUIT	RECT. #1 CABINET HEATER	CABINET HEATER POWER SUPPLY	0
AC-13	2/C	#10	600V	90°C	120V	AC		0	#12	208/120V PANEL SS CKT NO.14	CABLE TRAY X6, & CONDUIT	RECT. #2 CABINET HEATER	CABINET HEATER POWER SUPPLY	0
AC-14	2/C	#10	600V	90°C	120V	AC		0	#12	208/120V PANEL SS CKT NO.17	CABLE TRAY X6, & CONDUIT	RECT. #3 CABINET HEATER	CABINET HEATER POWER SUPPLY	0
MA-1	1-1/C	#10	2000V	90°C	700V	DC		0		DC CATH BKR NO.3 (E-F08-23)	CONDUIT	NEGATIVE SWBD	NEGATIVE POLARITY REF.	0
MA-2	1-1/C	#6	2000V	90°C	GRD	DC		0		DC FDR BKR NO.1(E-F08-31)	CONDUIT	SUBSTATION GRD. BUS	SURGE ARRESTER GND.	0
MA-3	1-1/C	#6	2000V	90°C	GRD	DC		0		DC FDR BKR NO.2(E-F08-32)	CONDUIT	SUBSTATION GRD. BUS	SURGE ARRESTER GND.	0
MA-4	1-1/C	#6	2000V	90°C	GRD	DC		0		DC FDR BKR NO.3(E-F08-33)	CONDUIT	SUBSTATION GRD. BUS	SURGE ARRESTER GND.	0
MA-5	1-1/C	#6	2000V	90°C	GRD	DC		0		DC FDR BKR NO.4(E-F08-34)	CONDUIT	SUBSTATION GRD. BUS	SURGE ARRESTER GND.	0
MA-6	1-1/C	#6	2000V	90°C	GRD	DC		0		DC FDR BKR NO.5(E-F08-35)	CONDUIT	SUBSTATION GRD. BUS	SURGE ARRESTER GND.	0
MA-7	1-1/C	#6	2000V	90°C	GRD	DC		0		DC FDR BKR NO.6(E-F08-36)	CONDUIT	SUBSTATION GRD. BUS	SURGE ARRESTER GND.	0
MA-8	1-2/C	#10	600V	90°C	GRD	DC		0		DC CATH BKR NO.2(E-F08-22)	CONDUIT	SUBSTATION GRD. BUS	HOT & GRN.STRUCT. RELAY	0
MA-9	1-2/C	#10	600V	90°C	GRD	DC		0		RECTIFIER NO.1	CONDUIT	SUBSTATION GRD. BUS	HOT & GRN.STRUCT. RELAY	0
MA-10	1-2/C	#10	600V	90°C	GRD	DC		0		RECTIFIER NO.2	CONDUIT	SUBSTATION GRD. BUS	HOT & GRN.STRUCT. RELAY	0
MA-11	1-2/C	#10	600V	90°C	GRD	DC		0		RECTIFIER NO.3	CONDUIT	SUBSTATION GRD. BUS	HOT & GRN.STRUCT. RELAY	0

CABLE					CIRCUIT					ROUTING				
NUMBER	CONSTRUCT.	SIZE AWG.	INSULATION VOLTAGE	INSULATION TYPE	VOLTAGE	A.C. OR D.C.	CURRENT	SPARE COND.	GRD COND. SIZE	FROM	VIA	TO	FOR	REV. NO.
TD-1	2-2/C TW.PR.	#14	600V	90°C		DC				DC CATH BKR NO.1(E-F08-21)	CABLE TRAY X6, & CONDUIT	AEMS RTU	XD-A XD-W	0
TD-2	2-2/C TW.PR.	#14	600V	90°C		DC				DC CATH BKR NO.2(E-F08-22)	CABLE TRAY X6, & CONDUIT	AEMS RTU	XD-A XD-W	0
TD-3	3-2/C TW.PR.	#14	600V	90°C		DC				DC CATH BKR NO.3(E-F08-23)	CABLE TRAY X6, & CONDUIT	AEMS RTU	XD-A XD-W,XD-V	0
TD-4	1-4/C TW.PR.	#14	600V	90°C		DC				PEPCO METERING PANEL	CABLE TRAY X6, & CONDUIT	AEMS RTU	KYZ PULSE	0
TD-5	1-2/C,1-4/C TW.PR.	#14	600V	90°C		DC				15KV INC LINE NO.1 BKR	CABLE TRAY X6, & CONDUIT	AEMS RTU	INCOM. LINE DPM ANALOG SIGNAL, KYZ	0
TD-6	1-2/C,1-4/C TW.PR.	#14	600V	90°C		DC				15KV INC LINE NO.2 BKR	CABLE TRAY X6, & CONDUIT	AEMS RTU	INCOM. LINE DPM ANALOG SIGNAL, KYZ	0
GR-1	1-1/C	#4/0	600V	90°C				0		15KV RECT XFMR NO.2 FDR BKR	CONDUIT	SUBSTATION GRD. BUS	EQUIPMENT GRD.	0
GR-2	1-1/C	#4/0	600V	90°C				0		15KV RECT XFMR NO.3 FDR BKR	CONDUIT	SUBSTATION GRD. BUS	EQUIPMENT GRD.	0
GR-3	1-1/C	#4/0	600V	90°C				0		NEGATIVE SWBD. ENCLOSURE	CONDUIT	SUBSTATION GRD. BUS	EQUIPMENT GRD.	0
GR-4	1-1/C	#4/0	600V	90°C				0		PEPCO INCOMING CABLE TRAY	CONDUIT	SUBSTATION GRD. BUS	CABLE TRAY GRD.	0
GR-5	1-1/C	#4/0	600V	90°C				0		PEPCO INCOMING CABLE TRAY	CONDUIT	SUBSTATION GRD. BUS	CABLE TRAY GRD.	0
GR-6	1-1/C	#6	600V	90°C				0		CONTROL CABLE TRAY X6	CONDUIT	SUBSTATION GRD. BUS	CABLE TRAY GRD.	0
GR-7	1-1/C	#6	600V	90°C				0		CONTROL CABLE TRAY X6	CONDUIT	SUBSTATION GRD. BUS	CABLE TRAY GRD.	0
GR-8	1-1/C	#6	600V	90°C				0		UPS	CONDUIT	SUBSTATION GRD. BUS	EQUIPMENT GROUNDING	0

H – A.C. PRIMARY VOLTAGE CABLE
DP – D.C. POSITIVE POWER CABLE
DN – D.C. NEGATIVE POWER CABLE
DD – D.C. UTILITY DRAIN CABLE

AN – ANNUNCIATOR CABLE
SC – SUPERVISORY CONTROL CABLE
ET – EMERGENCY TRIP CABLE
MT – METERING & INSTRUMENTATION CABLE

CN – OPERATING CONTROL CABLE
MA – MISCELLANEOUS CIRCUITS
AC – A.C. LOW VOLTAGE POWER CIRCUITS
DC – D.C. CONTROL POWER CIRCUITS

TD – TRANSDUCER TO AEMS RTU CONNECTION
GR – GROUNDING CABLE

GENERAL NOTES:

1. NOMINAL VALUES OR VALUES FROM OTHER CONTRACTS USED BY WAY OF EXAMPLE. THE CONTRACTOR SHALL INSERT NAMES, LOCATIONS, VALUES AND DATA BASED ON THE DESIGN AND INSTALLATION FOR THIS PROJECT.
2. THIS DRAWING IS PROVIDED FOR ILLUSTRATION ONLY TO INDICATE TYPE AND APPEARANCE OF INFORMATION REQUIRED BY WMATA.

DESIGNED J. KROLIK 2-01 DATE
DRAWN L. POWELL 2-01 DATE
CHECKED D. GLEN 2-01 DATE
APPROVED R. GANERIWAL 2-01 DATE

REFERENCE DRAWINGS

NUMBER	DESCRIPTION

REVISIONS

DATE	BY	DESCRIPTION
08/2001	SYSP	Revised and issued by the Authority

WASHINGTON METROPOLITAN AREA TRANSIT AUTHORITY

DEPARTMENT OF TRANSIT SYSTEM DEVELOPMENT
OFFICE OF SYSTEMS

SUBMITTED _____ DATE

APPROVED DIRECTOR _____ May 3, 2001 DATE

TRACTION POWER SITE SPECIFIC DWG
13.8kV ABOVE GROUND REMOTE TPS
CABLE SCHEDULE – SHEET 3

SCALE NONE

DRAWING NO. ST-TP-SSI-007

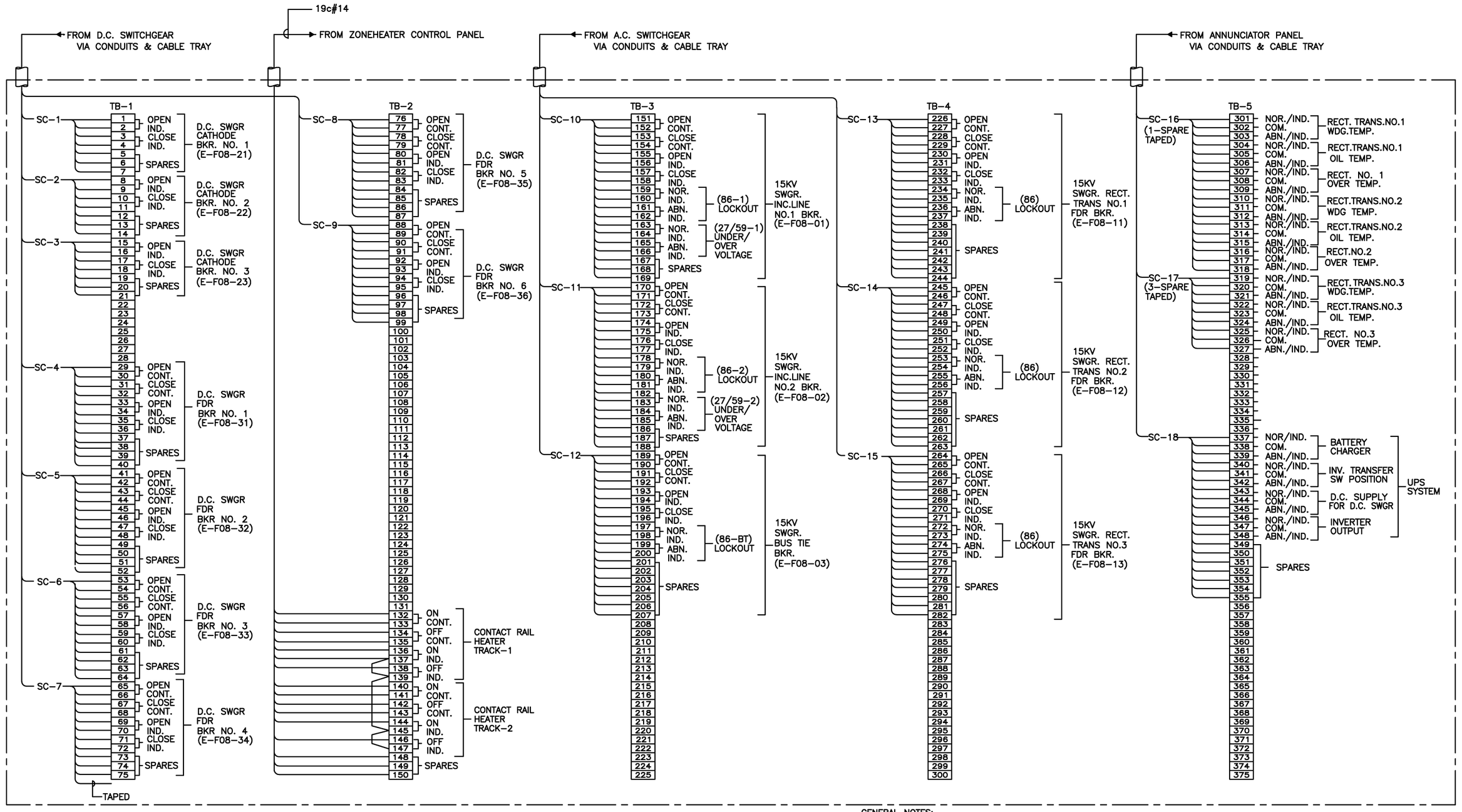

DATA TRANSMISSION SYSTEM (DTS) CABINET
(INTERCONNECTION WIRING DIAGRAM)

GENERAL NOTES:

1. NOMINAL VALUES OR VALUES FROM OTHER CONTRACTS USED BY WAY OF EXAMPLE. THE CONTRACTOR SHALL INSERT NAMES, LOCATIONS, VALUES AND DATA BASED ON THE DESIGN AND INSTALLATION FOR THIS PROJECT.
2. THIS DRAWING IS PROVIDED FOR ILLUSTRATION ONLY TO INDICATE TYPE AND APPEARANCE OF INFORMATION REQUIRED BY WMATA.

		DATE
DESIGNED	P.K. ROY	2-01
DRAWN	L. POWELL	2-01
CHECKED	D. GLEN	2-01
APPROVED	R. GANERIWAL	2-01

REFERENCE DRAWINGS

NUMBER	DESCRIPTION

REVISIONS

DATE	BY	DESCRIPTION
08/2001	SYSP	Revised and issued by the Authority

WASHINGTON METROPOLITAN AREA TRANSIT AUTHORITY

DEPARTMENT OF TRANSIT SYSTEM DEVELOPMENT
OFFICE OF SYSTEMS

SUBMITTED _____ DATE

APPROVED _____ DIRECTOR May 3, 2001 DATE

TRACTION POWER SITE SPECIFIC DWG
13.8kV ABOVE GROUND REMOTE TPS
DTS INTERCONNECTON

SCALE NONE

DRAWING NO. ST-TP-SSI-008

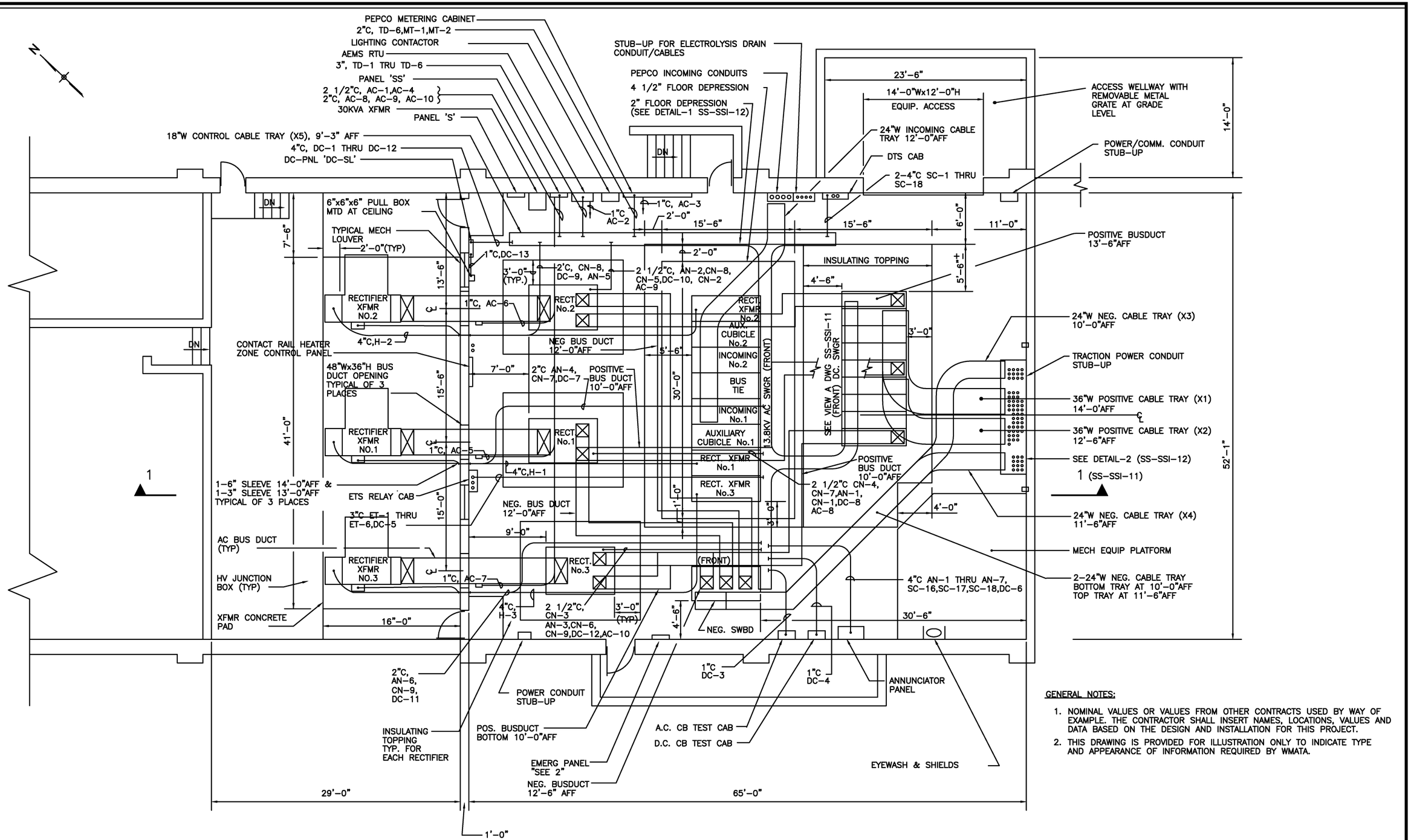

GENERAL NOTES:

1. NOMINAL VALUES OR VALUES FROM OTHER CONTRACTS USED BY WAY OF EXAMPLE. THE CONTRACTOR SHALL INSERT NAMES, LOCATIONS, VALUES AND DATA BASED ON THE DESIGN AND INSTALLATION FOR THIS PROJECT.
2. THIS DRAWING IS PROVIDED FOR ILLUSTRATION ONLY TO INDICATE TYPE AND APPEARANCE OF INFORMATION REQUIRED BY WMATA.

DESIGNED P. ROY 2-01 DATE
DRAWN L. POWELL 2-01 DATE
CHECKED D. GLEN 2-01 DATE
APPROVED R. GANERIWAL 2-01 DATE

REFERENCE DRAWINGS

NUMBER	DESCRIPTION

REVISIONS

DATE	BY	DESCRIPTION
08/2001	SYSP	Revised and issued by the Authority

WASHINGTON METROPOLITAN AREA TRANSIT AUTHORITY

DEPARTMENT OF TRANSIT SYSTEM DEVELOPMENT
OFFICE OF SYSTEMS

SUBMITTED _____ DATE

APPROVED _____ DIRECTOR May 3, 2001 DATE

TRACTION POWER SITE SPECIFIC DWG
13.8kV ABOVE GROUND IN-LINE(PS) TPS CONDUIT & CABLE TRAY PLAN

SCALE 3/16"=1'-0"

DRAWING NO. ST-TP-SSI-009

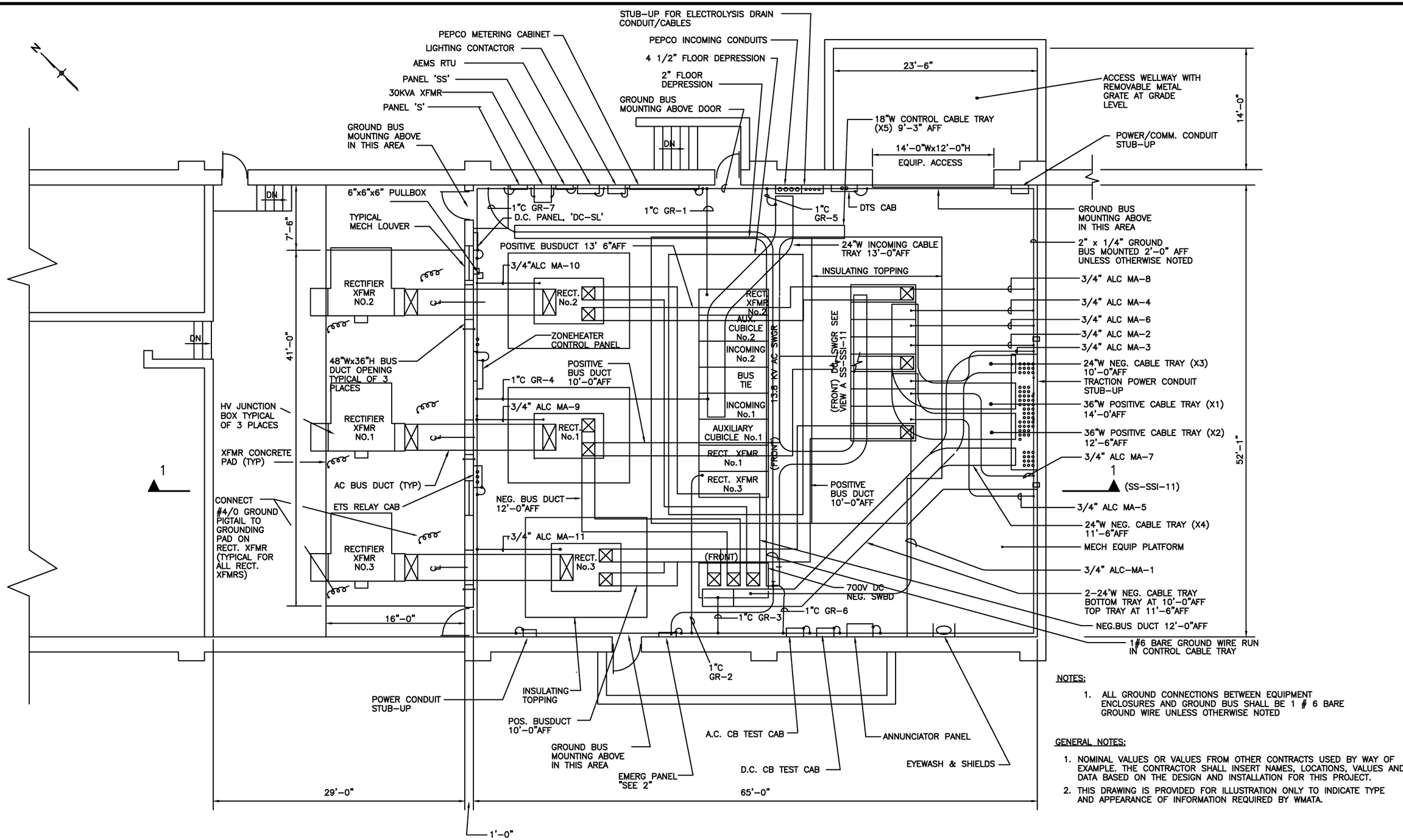

NOTES:

1. ALL GROUND CONNECTIONS BETWEEN EQUIPMENT ENCLOSURES AND GROUND BUS SHALL BE 1 # 6 BARE GROUND WIRE UNLESS OTHERWISE NOTED

GENERAL NOTES:

1. NOMINAL VALUES OR VALUES FROM OTHER CONTRACTS USED BY WAY OF EXAMPLE. THE CONTRACTOR SHALL INSERT NAMES, LOCATIONS, VALUES AND DATA BASED ON THE DESIGN AND INSTALLATION FOR THIS PROJECT.
2. THIS DRAWING IS PROVIDED FOR ILLUSTRATION ONLY TO INDICATE TYPE AND APPEARANCE OF INFORMATION REQUIRED BY WMATA.

DESIGNED	P. ROY	2-01 DATE
DRAWN	L. POWELL	2-01 DATE
CHECKED	D. GLEN	2-01 DATE
APPROVED	R. GANERIWAL	2-01 DATE

REFERENCE DRAWINGS

NUMBER	DESCRIPTION

REVISIONS

DATE	BY	DESCRIPTION
08/2001	SYSP	Revised and issued by the Authority

WASHINGTON METROPOLITAN AREA TRANSIT AUTHORITY

DEPARTMENT OF TRANSIT SYSTEM DEVELOPMENT
OFFICE OF SYSTEMS

SUBMITTED _____ DATE

APPROVED _____ DIRECTOR May 3, 2001 DATE

TRACTION POWER SITE SPECIFIC DWG
13.8kV ABOVE GROUND IN-LINE(PS) TPS GROUNDING PLAN

SCALE 3/16"=1'-0"

DRAWING NO. ST-TP-SSI-010

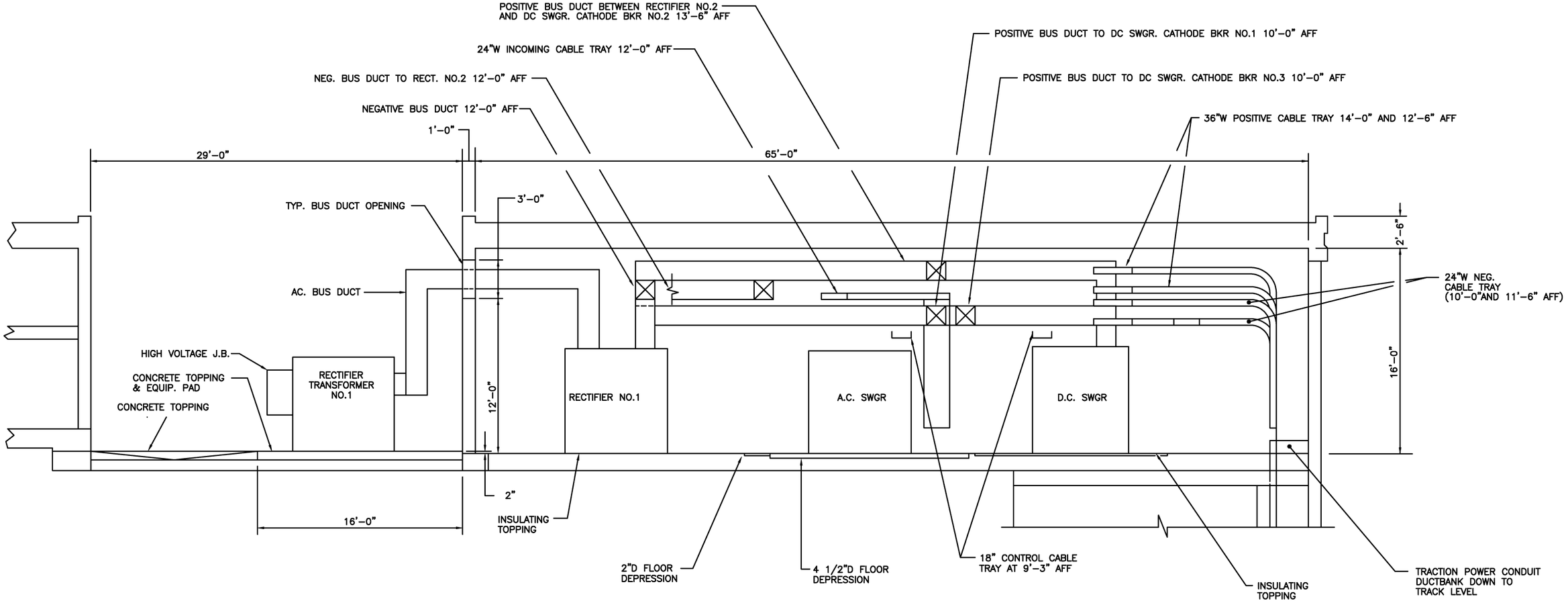

SECTION 1-1
(SS-SSI-09, SS-SSI-10)

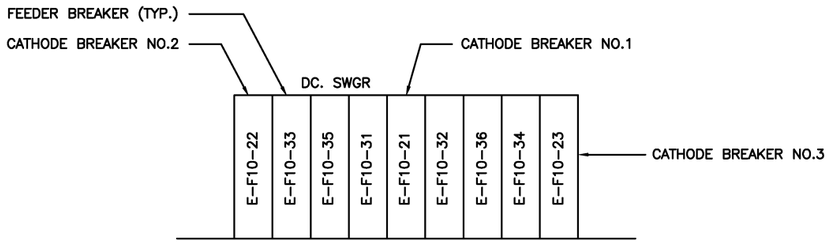

VIEW A
(SS-SSI-09, SS-SSI-10)

GENERAL NOTES:

1. NOMINAL VALUES OR VALUES FROM OTHER CONTRACTS USED BY WAY OF EXAMPLE. THE CONTRACTOR SHALL INSERT NAMES, LOCATIONS, VALUES AND DATA BASED ON THE DESIGN AND INSTALLATION FOR THIS PROJECT.
2. THIS DRAWING IS PROVIDED FOR ILLUSTRATION ONLY TO INDICATE TYPE AND APPEARANCE OF INFORMATION REQUIRED BY WMATA.

DESIGNED	P. ROY	2-01 DATE
DRAWN	L. POWELL	2-01 DATE
CHECKED	D. GLEN	2-01 DATE
APPROVED	R. GANERIWAL	2-01 DATE

REFERENCE DRAWINGS

NUMBER	DESCRIPTION

REVISIONS

DATE	BY	DESCRIPTION
08/2001	SYSP	Revised and issued by the Authority

WASHINGTON METROPOLITAN AREA TRANSIT AUTHORITY

DEPARTMENT OF TRANSIT SYSTEM DEVELOPMENT
OFFICE OF SYSTEMS

SUBMITTED _____ DATE

APPROVED _____ DIRECTOR May 3, 2001 DATE

TRACTION POWER SITE SPECIFIC DWG
13.8kV ABOVE GROUND IN-LINE(PS) TPS SECTIONS

SCALE 1/4"=1'-0"

DRAWING NO. ST-TP-SSI-011

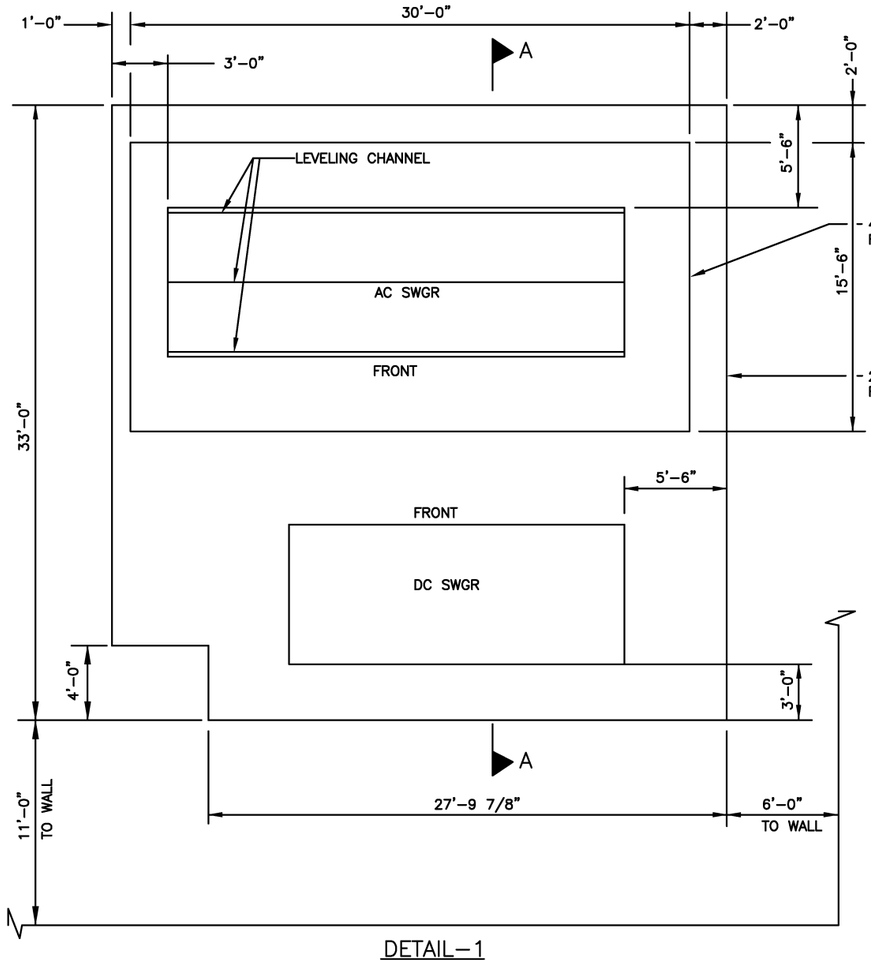

DETAIL–1
DEPRESSED FLOOR AREA PARTIAL PLAN
(SS–SSI–09)

GENERAL NOTES:

1. NOMINAL VALUES OR VALUES FROM OTHER CONTRACTS USED BY WAY OF EXAMPLE. THE CONTRACTOR SHALL INSERT NAMES, LOCATIONS, VALUES AND DATA BASED ON THE DESIGN AND INSTALLATION FOR THIS PROJECT.
2. THIS DRAWING IS PROVIDED FOR ILLUSTRATION ONLY TO INDICATE TYPE AND APPEARANCE OF INFORMATION REQUIRED BY WMATA.

PANEL NAME: DC–SL — LOCATION: TRACTION POWER SUBSTATION

RATING:
125V DC, 2W 225A MAINS
10,000 AIC BKRS. AT 125V DC

125A TRIP MAIN CKT. BKR.

SERVES EQUIPMENT	LOAD KVA	CKT. BKR. TRIP	CKT. BKR. No.				CKT. BKR. No.	CKT. BKR. TRIP	LOAD KVA	SERVES EQUIPMENT
AC SWGR. CONT. POWER	0.65	60	1				2	60	1.6	DC SWGR, CONT. POWER
AC CKT, BKR. TEST CAB	–	30	3				4	30	–	DC CKT, BKR. TEST CAB.
EMERG. TRIP SW, RELAY CAB.	0.1	30	5				6	30	–	SPARE
ANNUNCIATOR PANEL	1.0	20	7				8	20	–	CR. HTR. ZONE CONT. PANEL
RECT. TRANS No.1 CONT. POWER	0.2	20	9				10	20	0.05	RECT. No.1 CONT. POWER
RECT. TRANS No.2 CONT. POWER	0.2	20	11				12	20	0.05	RECT. No.2 CONT. POWER
RECT. TRANS No.3 CONT. POWER	0.2	20	13				14	20	0.05	RECT. No.3 CONT. POWER
SPARE	–	20	15				16	20	–	SPARE
SUBTOTAL	2.35					SUBTOTAL			1.75	

CONN. LOAD: 4.1 KVA — SPARE: 0.9 KVA — TOTAL: 5.0 KVA

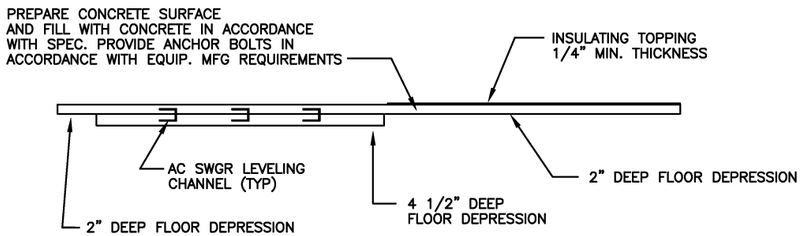

SECTION A–A

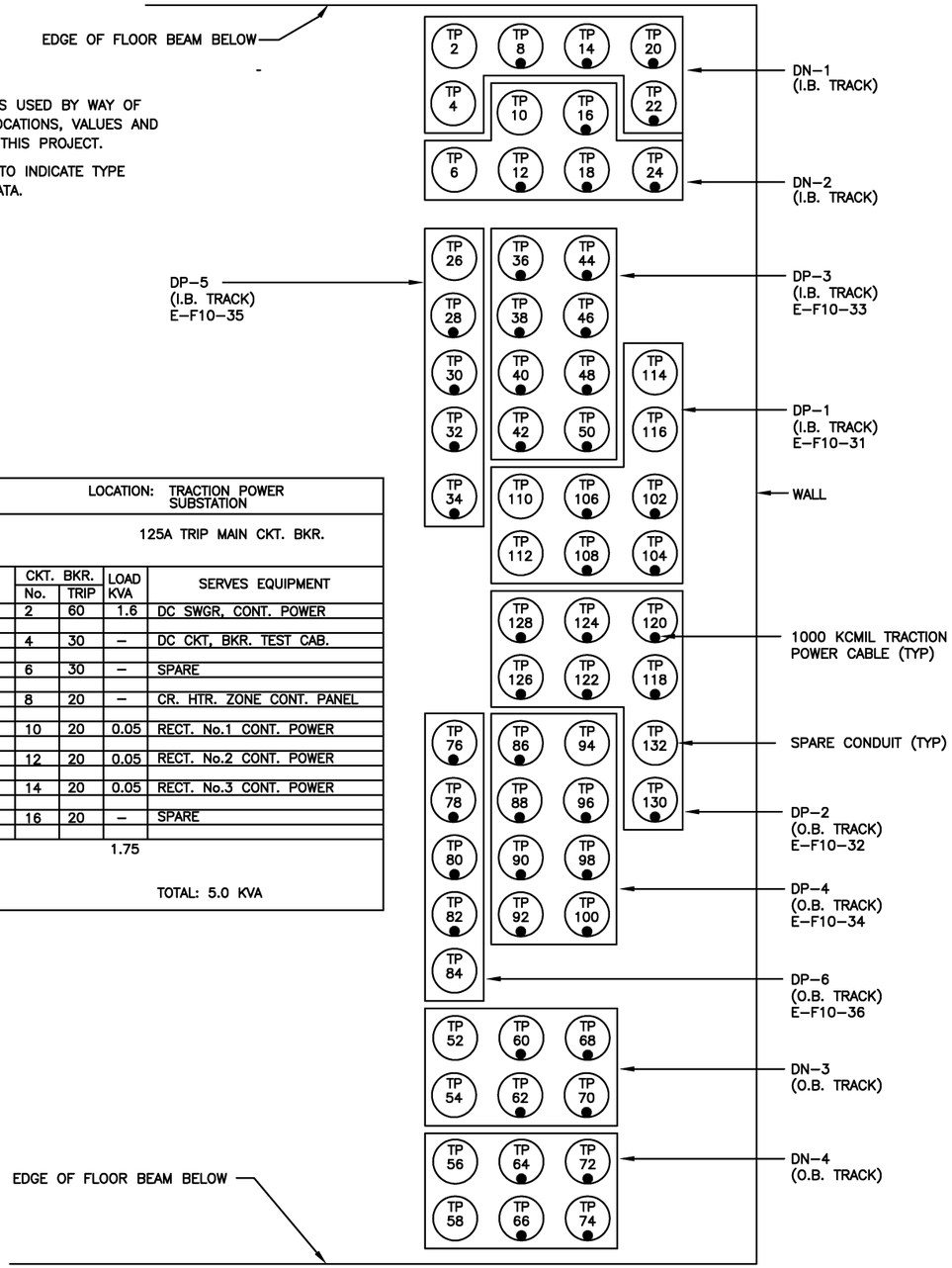

DETAIL–2
TRACTION POWER CONDUIT STUB–UP PLAN
(SS–SSI–09)

DESIGNED P. ROY 2–01 DATE
DRAWN L. POWELL 2–01 DATE
CHECKED D. GLEN 2–01 DATE
APPROVED R. GANERIWAL 2–01 DATE

REFERENCE DRAWINGS

NUMBER	DESCRIPTION

REVISIONS

DATE	BY	DESCRIPTION
08/2001	SYSP	Revised and issued by the Authority

WASHINGTON METROPOLITAN AREA TRANSIT AUTHORITY

DEPARTMENT OF TRANSIT SYSTEM DEVELOPMENT
OFFICE OF SYSTEMS

SUBMITTED _____ DATE

APPROVED _____ DIRECTOR May 3, 2001 DATE

TRACTION POWER SITE SPECIFIC DWG
13.8kV ABOVE GROUND IN–LINE(PS) TPS
MISCELLANEOUS DETAILS

SCALE NONE

DRAWING NO. ST–TP–SSI–012

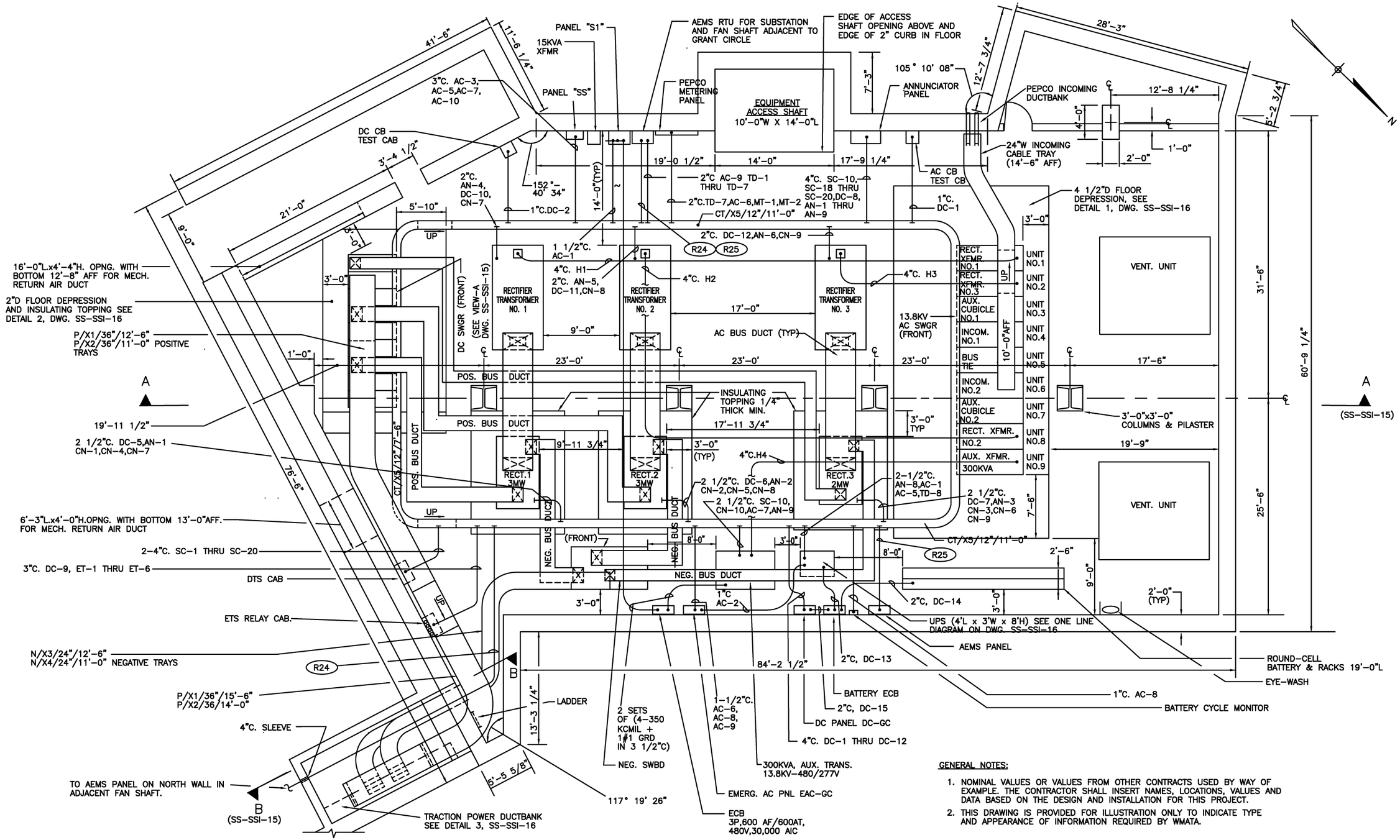

GENERAL NOTES:

1. NOMINAL VALUES OR VALUES FROM OTHER CONTRACTS USED BY WAY OF EXAMPLE. THE CONTRACTOR SHALL INSERT NAMES, LOCATIONS, VALUES AND DATA BASED ON THE DESIGN AND INSTALLATION FOR THIS PROJECT.
2. THIS DRAWING IS PROVIDED FOR ILLUSTRATION ONLY TO INDICATE TYPE AND APPEARANCE OF INFORMATION REQUIRED BY WMATA.

DESIGNED	PK ROY	2-01 DATE
DRAWN	L. POWELL	2-01 DATE
CHECKED	D. GLEN	2-01 DATE
APPROVED	R GANERIWAL	2-01 DATE

REFERENCE DRAWINGS

NUMBER	DESCRIPTION

REVISIONS

DATE	BY	DESCRIPTION
08/2001	SYSP	Revised and issued by the Authority

WASHINGTON METROPOLITAN AREA TRANSIT AUTHORITY

DEPARTMENT OF TRANSIT SYSTEM DEVELOPMENT
OFFICE OF SYSTEMS

SUBMITTED _____ DATE

APPROVED _____ DIRECTOR May 3, 2001 DATE

TRACTION POWER SITE SPECIFIC DWG
13.8kV BELOW GROUND TPS
CONDUIT & CABLE TRAY PLAN

SCALE 3/16"=1'-0"

DRAWING NO. ST-TP-SSI-013

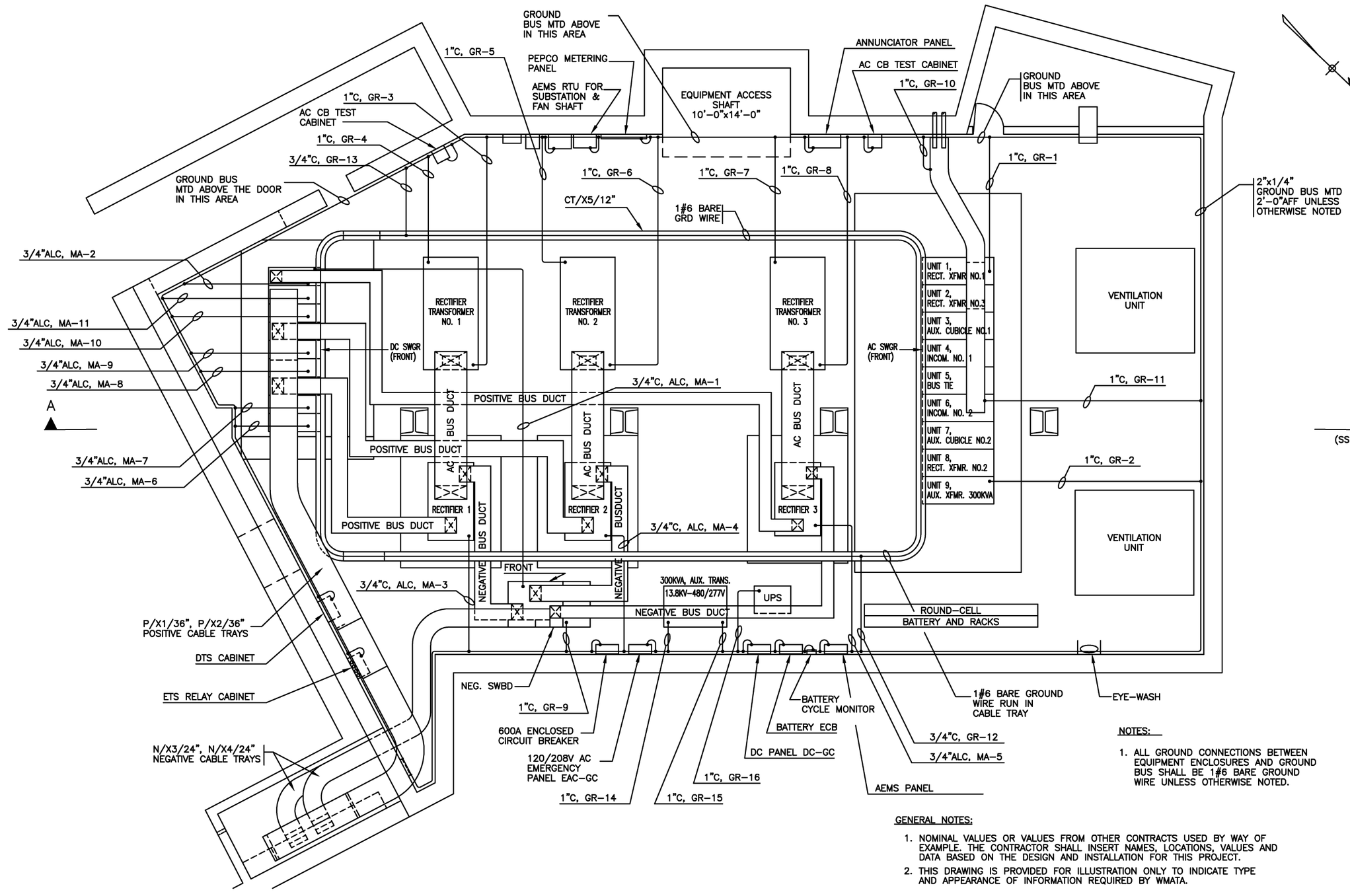

NOTES:

1. ALL GROUND CONNECTIONS BETWEEN EQUIPMENT ENCLOSURES AND GROUND BUS SHALL BE 1#6 BARE GROUND WIRE UNLESS OTHERWISE NOTED.

GENERAL NOTES:

1. NOMINAL VALUES OR VALUES FROM OTHER CONTRACTS USED BY WAY OF EXAMPLE. THE CONTRACTOR SHALL INSERT NAMES, LOCATIONS, VALUES AND DATA BASED ON THE DESIGN AND INSTALLATION FOR THIS PROJECT.
2. THIS DRAWING IS PROVIDED FOR ILLUSTRATION ONLY TO INDICATE TYPE AND APPEARANCE OF INFORMATION REQUIRED BY WMATA.

DESIGNED	PK ROY	2-01 DATE
DRAWN	L. POWELL	2-01 DATE
CHECKED	D. GLEN	2-01 DATE
APPROVED	R GANERIWAL	2-01 DATE

REFERENCE DRAWINGS

NUMBER	DESCRIPTION

REVISIONS

DATE	BY	DESCRIPTION
08/2001	SYSP	Revised and issued by the Authority

WASHINGTON METROPOLITAN AREA TRANSIT AUTHORITY

DEPARTMENT OF TRANSIT SYSTEM DEVELOPMENT
OFFICE OF SYSTEMS

SUBMITTED _____ DATE

APPROVED _____ DIRECTOR May 3, 2001 DATE

TRACTION POWER SITE SPECIFIC DWG
13.8kV BELOW GROUND TPS GROUNDING PLAN

SCALE 3/16"=1'-0"

DRAWING NO. ST-TP-SSI-014

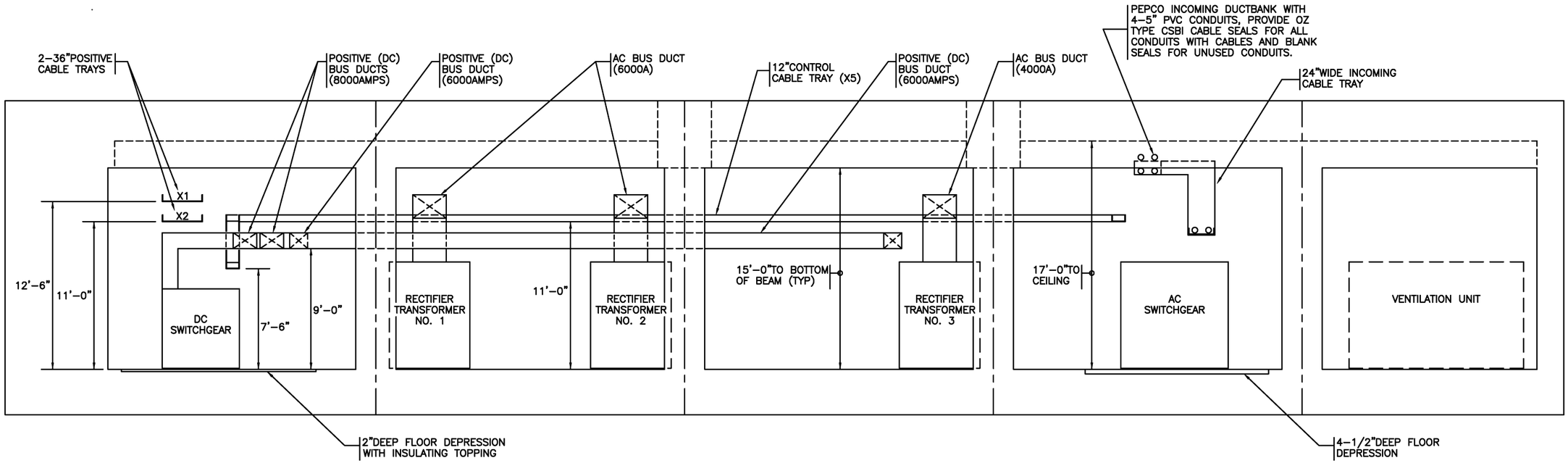

SECTION A–A
(SS–SSI–13)

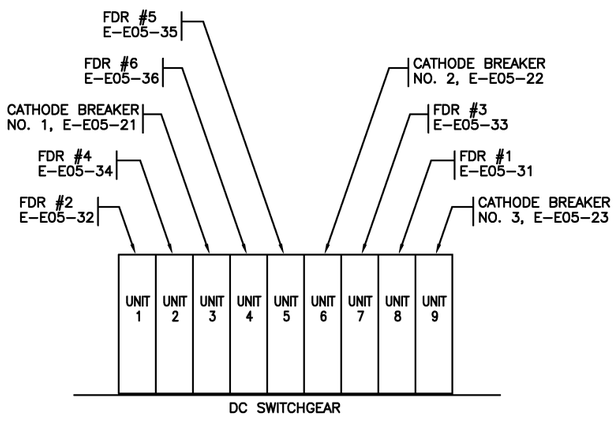

VIEW–A
(SS–SSI–13)

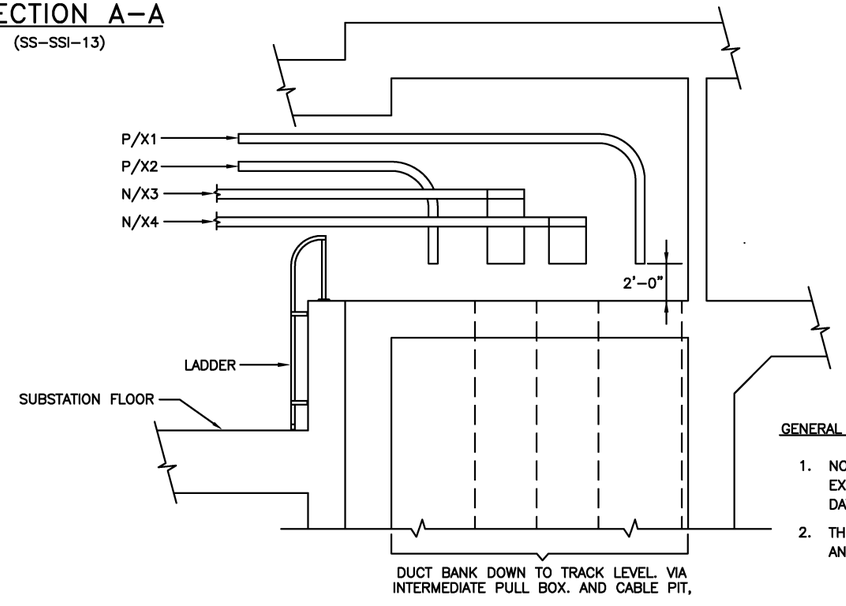

SECTION B–B
(SS–SSI–13)

GENERAL NOTES:

1. NOMINAL VALUES OR VALUES FROM OTHER CONTRACTS USED BY WAY OF EXAMPLE. THE CONTRACTOR SHALL INSERT NAMES, LOCATIONS, VALUES AND DATA BASED ON THE DESIGN AND INSTALLATION FOR THIS PROJECT.
2. THIS DRAWING IS PROVIDED FOR ILLUSTRATION ONLY TO INDICATE TYPE AND APPEARANCE OF INFORMATION REQUIRED BY WMATA.

DESIGNED	PK ROY	2–01 DATE
DRAWN	L. POWELL	2–01 DATE
CHECKED	D. GLEN	2–01 DATE
APPROVED	R GANERIWAL	2–01 DATE

REFERENCE DRAWINGS

NUMBER	DESCRIPTION

REVISIONS

DATE	BY	DESCRIPTION
08/2001	SYSP	Revised and issued by the Authority

WASHINGTON METROPOLITAN AREA TRANSIT AUTHORITY

DEPARTMENT OF TRANSIT SYSTEM DEVELOPMENT
OFFICE OF SYSTEMS

SUBMITTED _____ DATE

APPROVED _____ DIRECTOR May 3, 2001 DATE

TRACTION POWER SITE SPECIFIC DWG
13.8kV BELOW GROUND TPS
SECTION

SCALE 1/4"=1'–0"

DRAWING NO. ST–TP–SSI–015

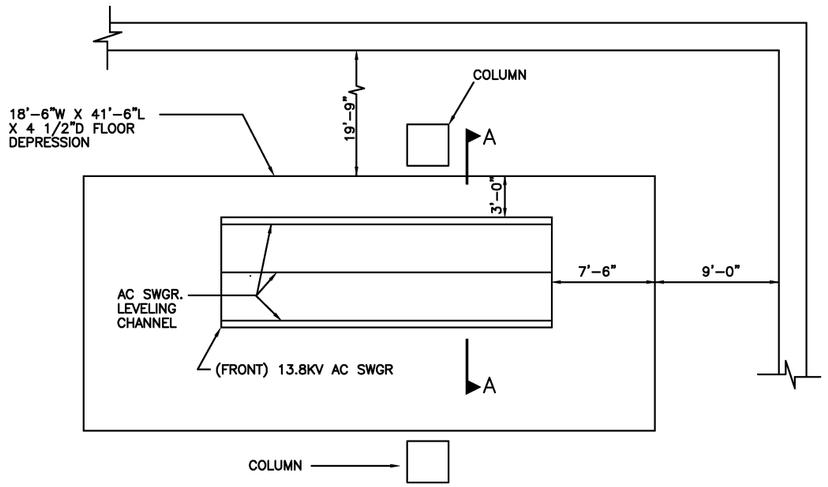

DETAIL 1

DEPRESSED FLOOR AREA PARTIAL PLAN

(SS–SSI–13)

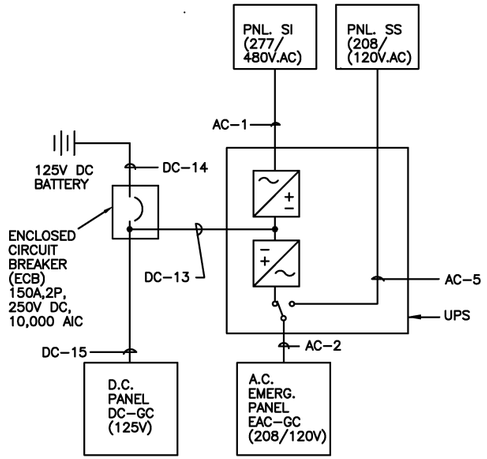

UPS POWER SUPPLY

ONE LINE DIAGRAM

PANEL NAME: EAC–GC — LOCATION: SUBSTATION

RATING: 208/120V AC, 3ø 4W 100A MAINS, 10,000 AIC BKRS. AT 120V AC — GRD BUS — MAIN CKT. BKR: 50A SURFACE MOUNTING

SERVES EQUIPMENT	LOAD KVA	CKT. BKR. TRIP	CKT. BKR. No.				CKT. BKR. No.	CKT. BKR. TRIP	LOAD KVA	SERVES EQUIPMENT
AEMS RTU FOR TPS & FANSHAFT	0.2	20	1				2	20	0.1	BATTERY CYCLE MONITOR
PEPCO METERING PANEL	0.1	20	3				4	20	–	SPARE
SPARE	–	20	5				6	20	–	SPARE
SPARE	–	20	7				8	20	–	SPARE
SPARE	–	20	9				10	20	–	SPARE
SUBTOTAL	0.3				SUBTOTAL				0.1	
TOTAL	0.4 KVA									

PANEL NAME: DC–GC — LOCATION: SUBSTATION

RATING: 125V DC, 2W 100A MAINS, 10,000 AIC BKRS. AT 125V DC — 100A MAIN CKT. BKR. SURFACE MOUNTING

SERVES EQUIPMENT	LOAD KVA	CKT. BKR. TRIP	CKT. BKR. No.				CKT. BKR. No.	CKT. BKR. TRIP	LOAD KVA	SERVES EQUIPMENT
AC SWGR. CONT. POWER	0.65	60	1				2	60	1.6	DC SWGR, CONT. POWER
AC CKT, BKR. TEST CAB	–	30	3				4	30	–	DC CKT, BKR. TEST CAB.
EMERG. TRIP SW, RELAY CAB.	0.1	30	5				6	30	–	SPARE
ANNUNCIATOR PANEL	1.0	20	7				8	20	–	SPARE
RECT. TRANS No.1 CONT. POWER	0.2	20	9				10	20	0.05	RECT. No.1 CONT. POWER
RECT. TRANS No.2 CONT. POWER	0.2	20	11				12	20	0.05	RECT. No.2 CONT. POWER
RECT. TRANS No.3 CONT. POWER	0.2	20	13				14	20	0.05	RECT. No.3 CONT. POWER
SPARE	–	20	15				16	20	–	SPARE
SUBTOTAL	2.35				SUBTOTAL				1.75	

CONN. LOAD: 4.1 KVA — SPARE: 0.9 KVA — TOTAL: 5.0 KVA

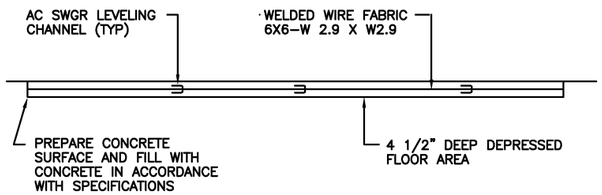

SECTION A–A

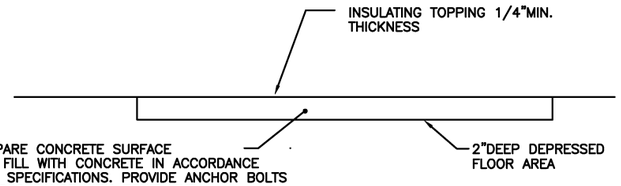

SECTION B–B

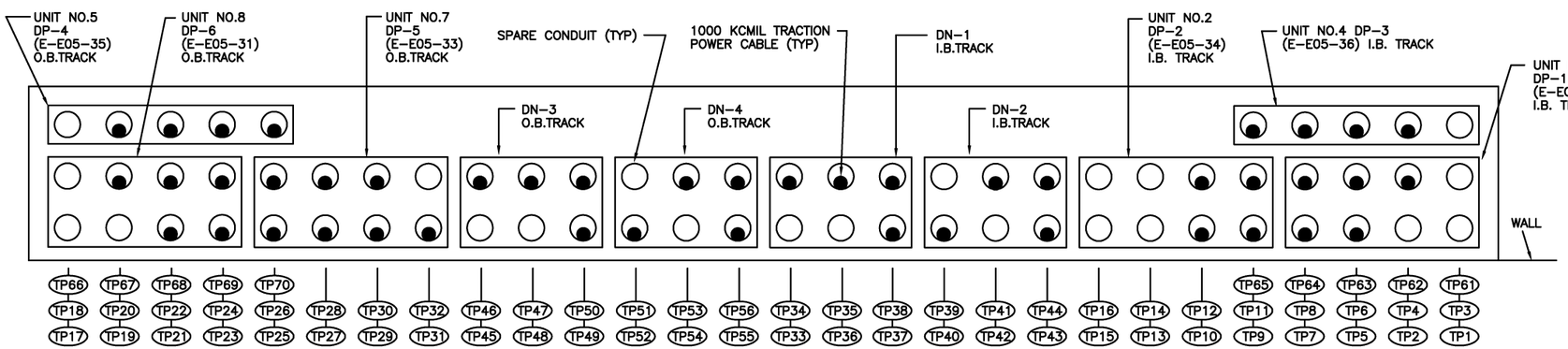

DETAIL 3

TRACTION POWER CONDUITS STUB – UP PLAN

(POSITIVE AND NEGATIVE)

(SS–SSI–13)

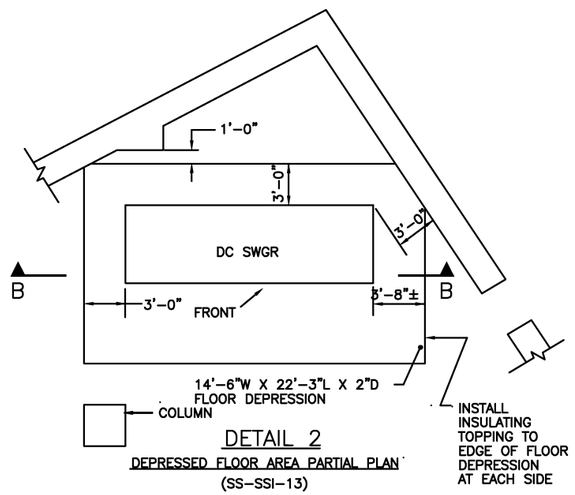

DETAIL 2

DEPRESSED FLOOR AREA PARTIAL PLAN

(SS–SSI–13)

GENERAL NOTES:

1. NOMINAL VALUES OR VALUES FROM OTHER CONTRACTS USED BY WAY OF EXAMPLE. THE CONTRACTOR SHALL INSERT NAMES, LOCATIONS, VALUES AND DATA BASED ON THE DESIGN AND INSTALLATION FOR THIS PROJECT.
2. THIS DRAWING IS PROVIDED FOR ILLUSTRATION ONLY TO INDICATE TYPE AND APPEARANCE OF INFORMATION REQUIRED BY WMATA.

DESIGNED PK ROY 2–01 DATE

DRAWN L. POWELL 2–01 DATE

CHECKED D. GLEN 2–01 DATE

APPROVED R GANERIWAL 2–01 DATE

REFERENCE DRAWINGS

NUMBER	DESCRIPTION

REVISIONS

DATE	BY	DESCRIPTION
08/2001	SYSP	Revised and issued by the Authority

WASHINGTON METROPOLITAN AREA TRANSIT AUTHORITY

DEPARTMENT OF TRANSIT SYSTEM DEVELOPMENT
OFFICE OF SYSTEMS

SUBMITTED _____ DATE

APPROVED _____ DIRECTOR May 3, 2001 DATE

TRACTION POWER SITE SPECIFIC DWG
13.8kV BELOW GROUND TPS
MISCELLANEOUS DETAILS

SCALE NONE

DRAWING NO. ST–TP–SSI–016

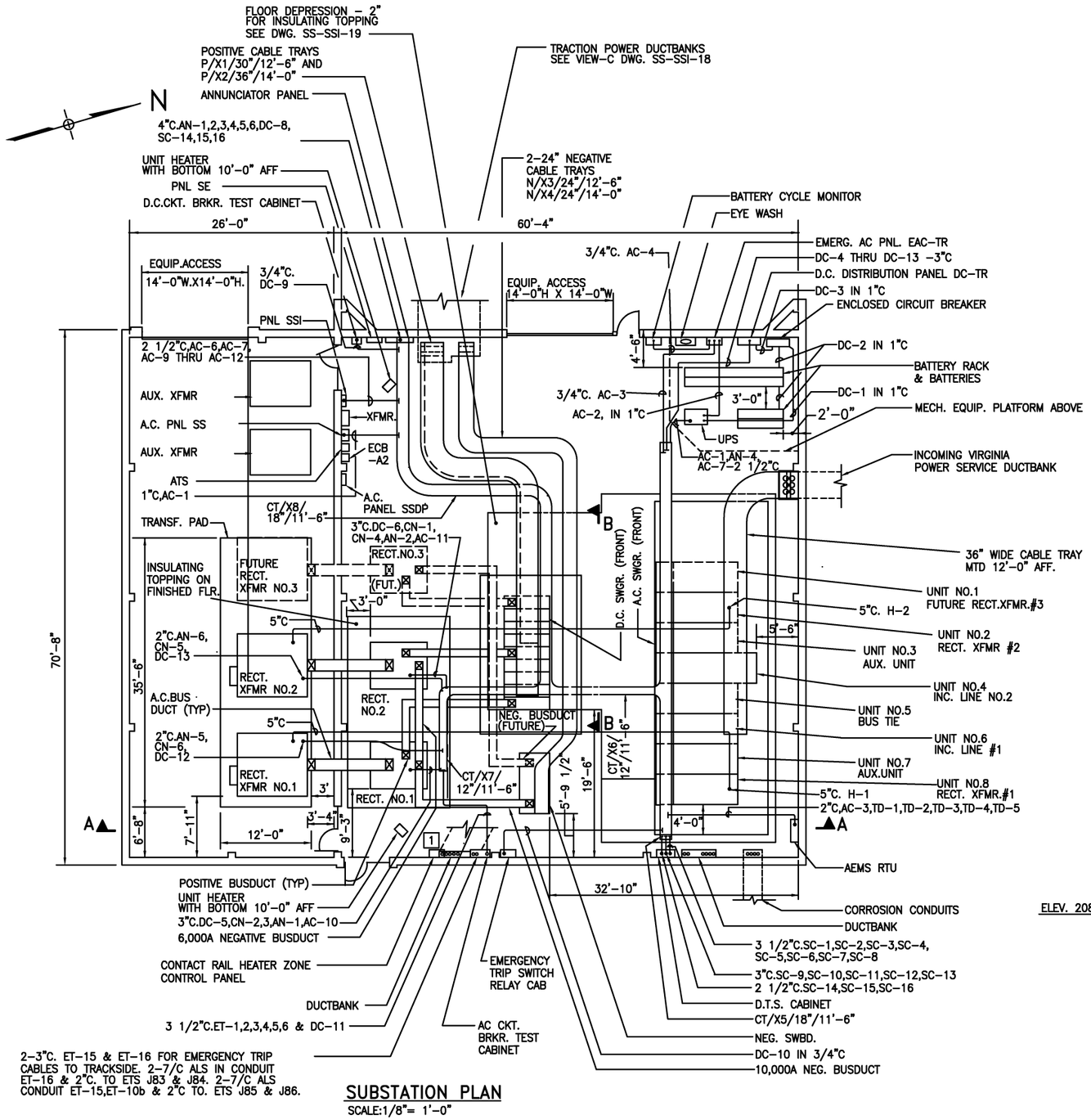

SUBSTATION PLAN

SCALE:1/8"= 1'-0"

GENERAL NOTES:

1. NOMINAL VALUES OR VALUES FROM OTHER CONTRACTS USED BY WAY OF EXAMPLE. THE CONTRACTOR SHALL INSERT NAMES, LOCATIONS, VALUES AND DATA BASED ON THE DESIGN AND INSTALLATION FOR THIS PROJECT.
2. THIS DRAWING IS PROVIDED FOR ILLUSTRATION ONLY TO INDICATE TYPE AND APPEARANCE OF INFORMATION REQUIRED BY WMATA.

UNIT 1 (E-J03-21) CATH BRKR 1	UNIT 2 (E-J03-31) FDR 1	UNIT 3 (E-J03-32) FDR 2	UNIT 4 (E-J03-34) FDR 4	UNIT 5 (E-J03-22) CATH BRKR 2	UNIT 6 (E-J03-33) FDR 3	UNIT 7 (E-J03-35) FDR 5	UNIT 8 (E-J03-36) FDR 6	UNIT 9 FUT. CATH BRKR 3

VIEW-BB

NOT TO SCALE

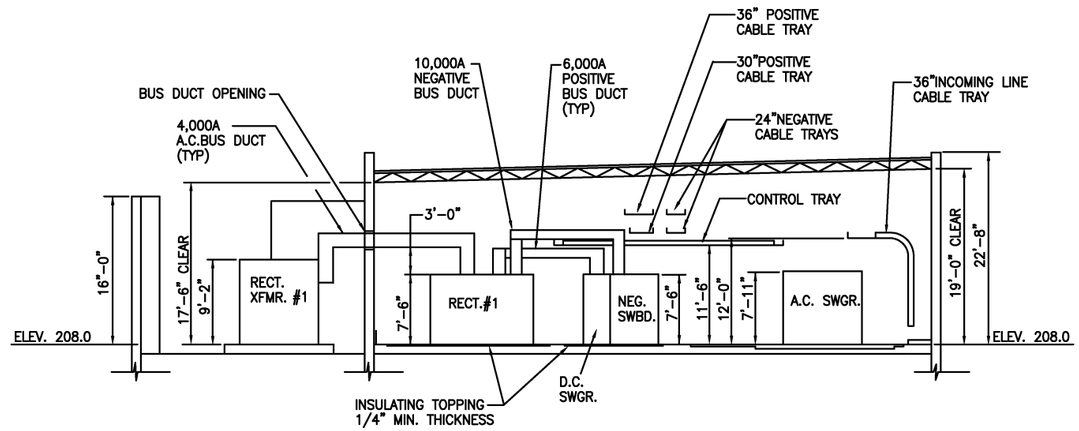

SECTION A-A

NOT TO SCALE

DESIGNED	W.T.	2-01 DATE
DRAWN	L. POWELL	2-01 DATE
CHECKED	D.GLEN	2-01 DATE
APPROVED	R.GANERIWAL	2-01 DATE

REFERENCE DRAWINGS

NUMBER	DESCRIPTION

REVISIONS

DATE	BY	DESCRIPTION
08/2001	SYSP	Revised and issued by the Authority

WASHINGTON METROPOLITAN AREA TRANSIT AUTHORITY

DEPARTMENT OF TRANSIT SYSTEM DEVELOPMENT
OFFICE OF SYSTEMS

SUBMITTED _____ DATE

APPROVED _____ DIRECTOR May 3, 2001 DATE

TRACTION POWER SITE SPECIFIC DWG
34.5kV ABOVE GROUND REMOTE TPS
CONDUIT & CABLE TRAY

SCALE: AS NOTED

DRAWING NO. ST-TP-SSI-017

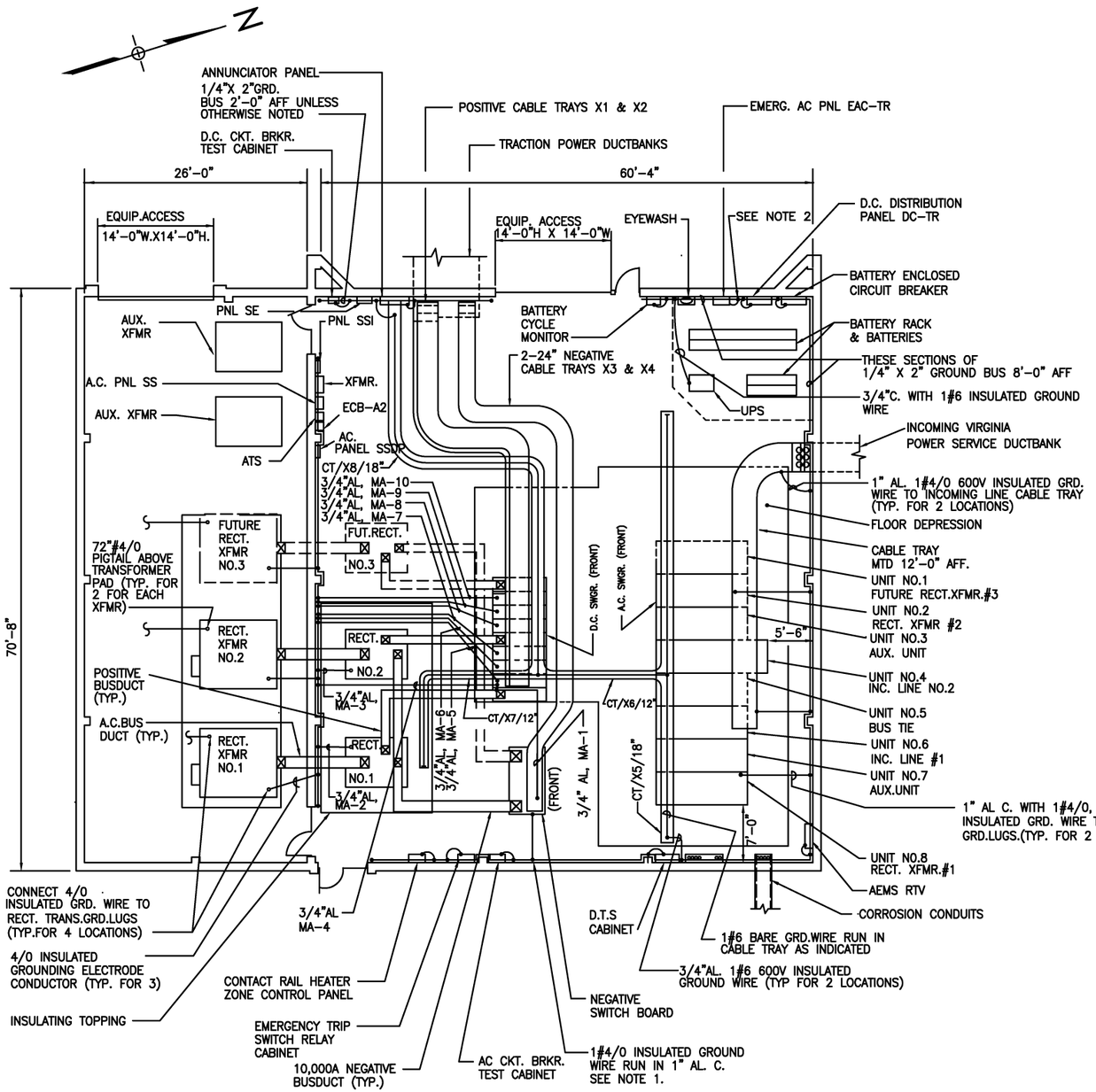

SUBSTATION PLAN

SCALE : 1/8"=1'-0"

NOTES:

1. CONNECT GROUND WIRE TO GROUND LUGS OF NEGATIVE SWITCHBOARD.
2. ALL GROUND TAPS (BONDING JUMPERS) FROM EQUIPMENT TO GROUND BUS SHALL BE 1 #6 BARE GROUND WIRE UNLESS OTHERWISE NOTED.

GENERAL NOTES:

1. NOMINAL VALUES OR VALUES FROM OTHER CONTRACTS USED BY WAY OF EXAMPLE. THE CONTRACTOR SHALL INSERT NAMES, LOCATIONS, VALUES AND DATA BASED ON THE DESIGN AND INSTALLATION FOR THIS PROJECT.
2. THIS DRAWING IS PROVIDED FOR ILLUSTRATION ONLY TO INDICATE TYPE AND APPEARANCE OF INFORMATION REQUIRED BY WMATA.

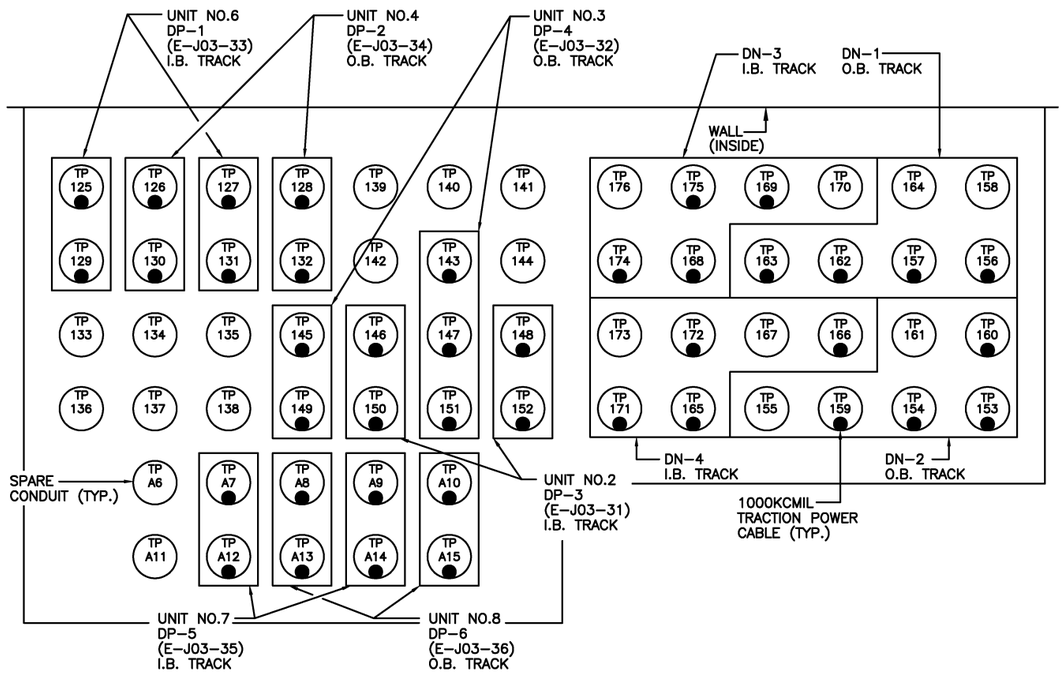

VIEW-C (SSI12-E-41)
SCALE:NONE

DESIGNED	W.T.	2-01	DATE
DRAWN	L. POWELL	2-01	DATE
CHECKED	D. GLEN	2-01	DATE
APPROVED	R.GANERIWAL	2-01	DATE

REFERENCE DRAWINGS

NUMBER	DESCRIPTION

REVISIONS

DATE	BY	DESCRIPTION
08/2001	SYSP	Revised and issued by the Authority

WASHINGTON METROPOLITAN AREA TRANSIT AUTHORITY

DEPARTMENT OF TRANSIT SYSTEM DEVELOPMENT
OFFICE OF SYSTEMS

SUBMITTED _____ DATE

APPROVED _____ DIRECTOR May 3, 2001 DATE

TRACTION POWER SITE SPECIFIC DWG
34.5kV ABOVE GROUND REMOTE TPS
GROUNDING AND DETAILS

SCALE: AS NOTED

DRAWING NO.: ST-TP-SSI-018

PANEL NAME: DC–TR										LOCATION: SUBSTATION
RATING: 125V DC, 2W 225A MAINS 10,000 AIC BKRS. AT 125V DC										125A MAIN CKT. BKR. SURFACE MOUNTING
SERVES EQUIPMENT	LOAD KVA	CKT. BKR. TRIP	CKT. BKR. No.				CKT. BKR. No.	CKT. BKR. TRIP	LOAD KVA	SERVES EQUIPMENT
RECT. No.1 CONT. PWR.	–	20	1				2	20	–	RECT. No.2 CONT. PWR.
SPARE (RECT.No.3)	–	20	3				4	20	–	ZONE CONTROL PANEL
AC SWGR.CONT. PWR.	–	60	5				6	60	–	DC SWGR. CONT. PWR.
SPARE	–	20	7				8	20	–	ANNUNCIATOR
DC CKT. BKR. TEST CAB.	–	30	9				10	30	–	AC CKT. BKR. TEST CAB.
EMERG. TRIP SW. RELAY CAB.	–	30	11				12	20	–	SPARE
RECT. TRANS. No.1 CONT. PWR.	–	20	13				14	20	–	RECT. TRANS. No.2 CONT. PWR.
SPARE (RECT. TRANS. No.3)	–	20	15				16	20	–	SPARE

PANEL No. EAC–TR										LOCATION: SUBSTATION
RATING: 208/120V AC, 3ø 4W 100A MAINS, 10,000 AIC BKRS. AT 120V AC				GRD BUS						MAIN CKT. BKR: 50A SURFACE MOUNTING
SERVES EQUIPMENT	LOAD KVA	CKT. BKR. TRIP	CKT. BKR. No.				CKT. BKR. No.	CKT. BKR. TRIP	LOAD KVA	SERVES EQUIPMENT
AEMS RTU	–	15	1				2	15	0.1	BATTERY CYCLE MONITOR
SPARE	–	15	3				4	15	–	SPARE
SPARE		15	5				6	15		SPARE
EMERGENCY LIGHTS	.7	15	7				8	15		SPARE
SPARE		15	9				10	15		SPARE

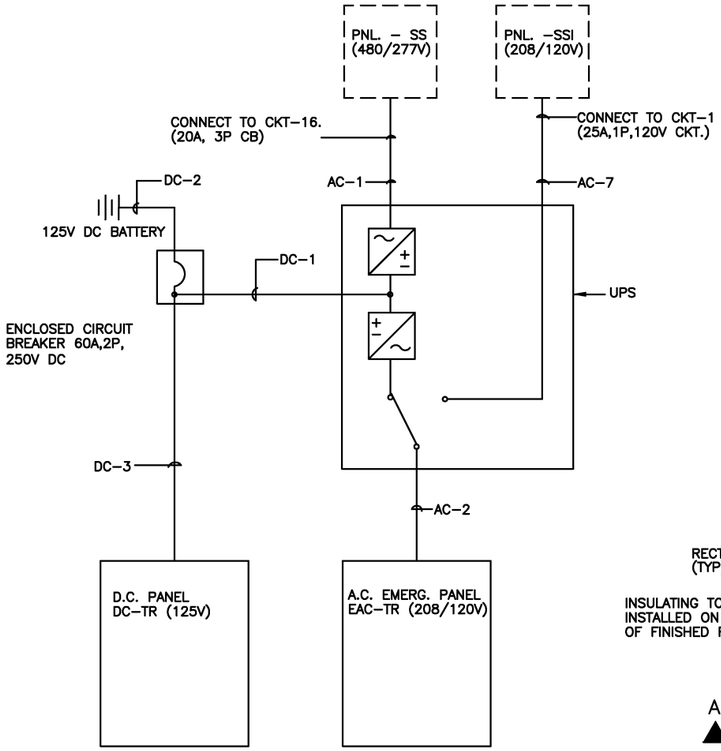

UPS POWER SUPPLY
ONE LINE DIAGRAM

GENERAL NOTES:

1. NOMINAL VALUES OR VALUES FROM OTHER CONTRACTS USED BY WAY OF EXAMPLE. THE CONTRACTOR SHALL INSERT NAMES, LOCATIONS, VALUES AND DATA BASED ON THE DESIGN AND INSTALLATION FOR THIS PROJECT.
2. THIS DRAWING IS PROVIDED FOR ILLUSTRATION ONLY TO INDICATE TYPE AND APPEARANCE OF INFORMATION REQUIRED BY WMATA.

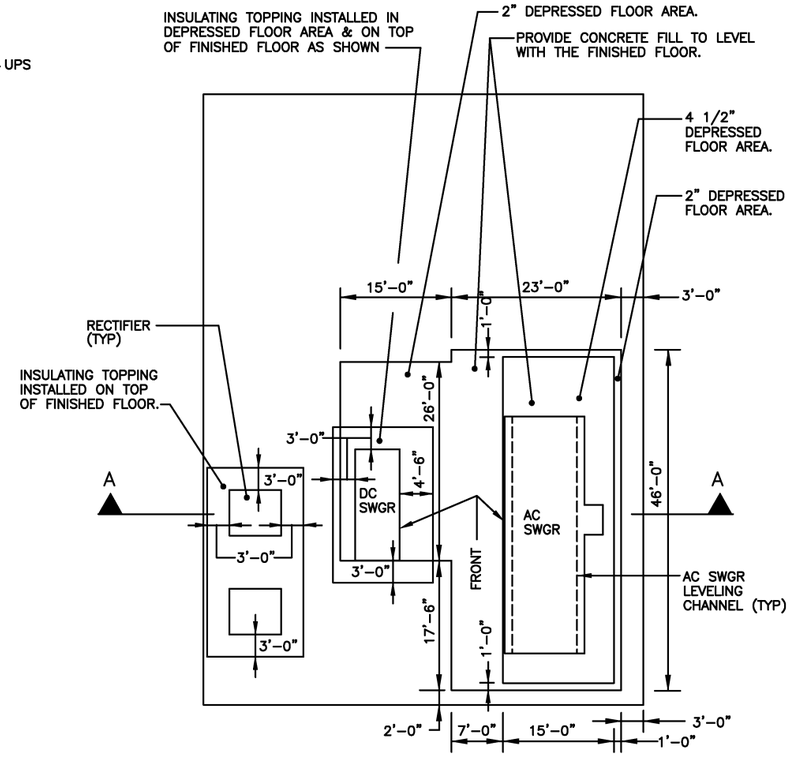

PART PLAN – DEPRESSED FLOOR AREA

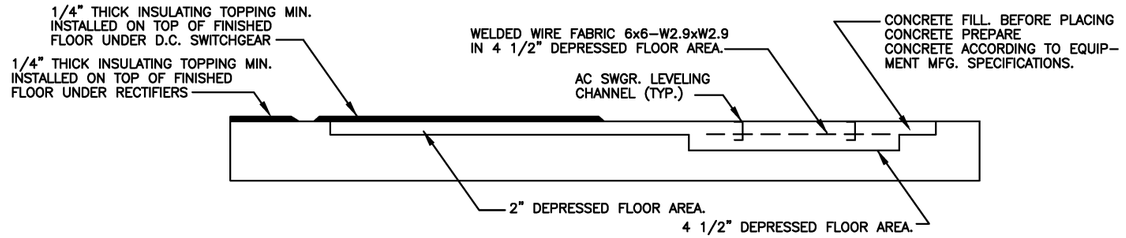

SECTION A–A

DESIGNED	W.T.	2–01 DATE
DRAWN	L. POWELL	2–01 DATE
CHECKED	D. GLEN	2–01 DATE
APPROVED	R.GANERIWAL	2–01 DATE

REFERENCE DRAWINGS	
NUMBER	DESCRIPTION

REVISIONS		
DATE	BY	DESCRIPTION
08/2001	SYSP	Revised and issued by the Authority

WASHINGTON METROPOLITAN AREA TRANSIT AUTHORITY

DEPARTMENT OF TRANSIT SYSTEM DEVELOPMENT
OFFICE OF SYSTEMS

SUBMITTED _____ DATE

APPROVED _____ May 3, 2001
DIRECTOR DATE

TRACTION POWER SITE SPECIFIC DWG
34.5kV ABOVE GROUND REMOTE TPS
UPS, PANELS SCHEDULES AND DETAILS

SCALE: NONE

DRAWING NO.: ST–TP–SSI–019

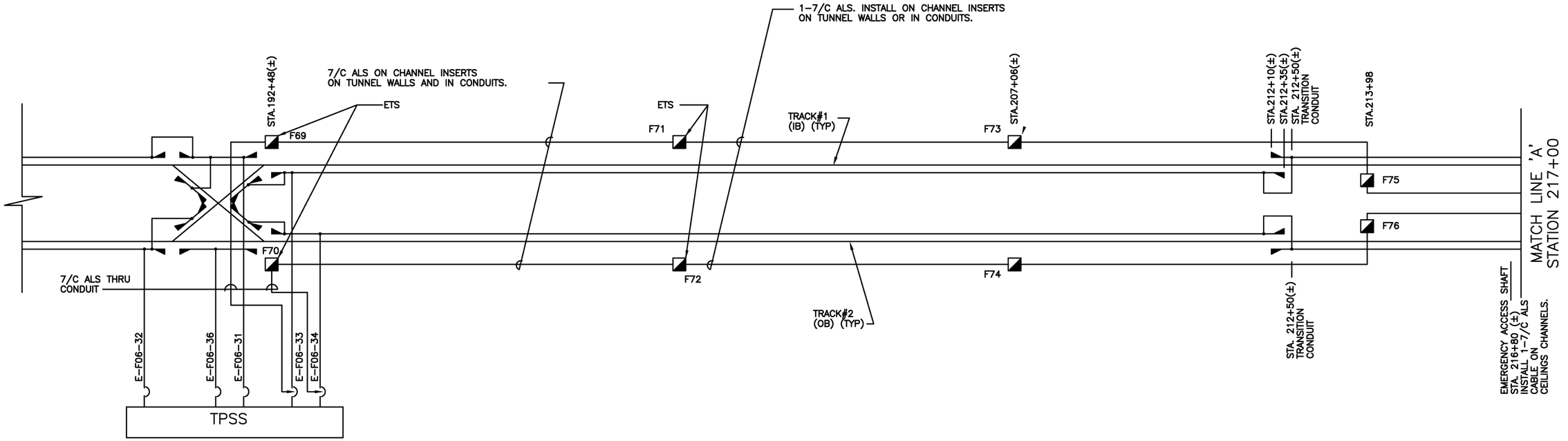

GENERAL NOTES:

1. NOMINAL VALUES OR VALUES FROM OTHER CONTRACTS USED BY WAY OF EXAMPLE. THE CONTRACTOR SHALL INSERT NAMES, LOCATIONS, VALUES AND DATA BASED ON THE DESIGN AND INSTALLATION FOR THIS PROJECT.
2. THIS DRAWING IS PROVIDED FOR ILLUSTRATION ONLY TO INDICATE TYPE AND APPEARANCE OF INFORMATION REQUIRED BY WMATA.

DESIGNED	P.K. ROY	2–01 DATE
DRAWN	L. POWELL	2–01 DATE
CHECKED	D. GLEN	2–01 DATE
APPROVED	R. GANERIWAL	2–01 DATE

REFERENCE DRAWINGS

NUMBER	DESCRIPTION

REVISIONS

DATE	BY	DESCRIPTION
08/2001	SYSP	Revised and issued by the Authority

WASHINGTON METROPOLITAN AREA TRANSIT AUTHORITY

DEPARTMENT OF TRANSIT SYSTEM DEVELOPMENT
OFFICE OF SYSTEMS

SUBMITTED _____ DATE

APPROVED _____ DIRECTOR May 3, 2001 DATE

TRACTION POWER SITE SPECIFIC DWG
EMERGENCY TRIP SWITCH LAYOUT

SCALE: NOT TO SCALE

DRAWING NO.: ST–TP–SSI–020

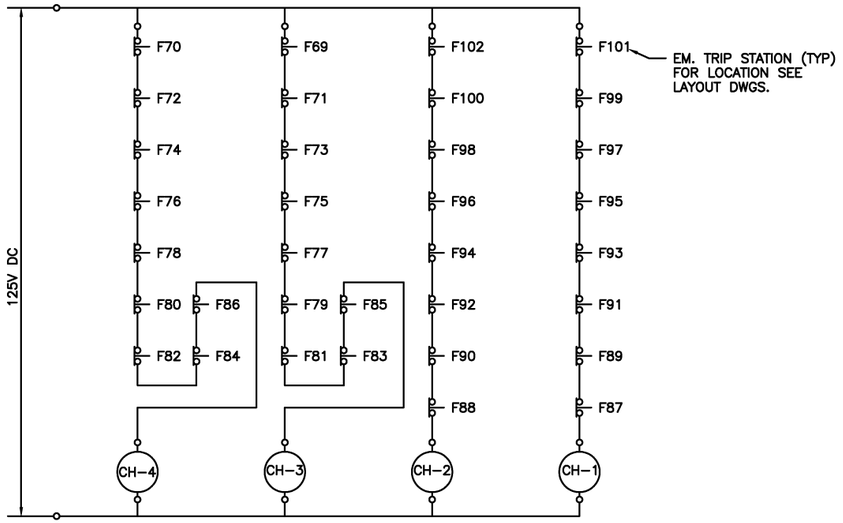

F07 TPS

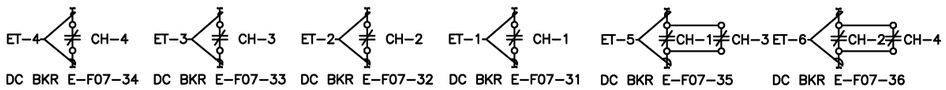

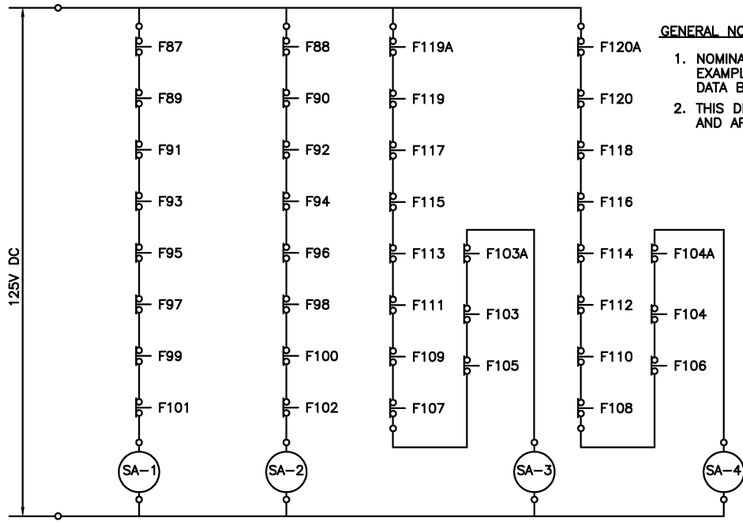

F08 TPS

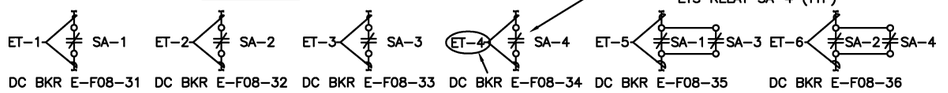

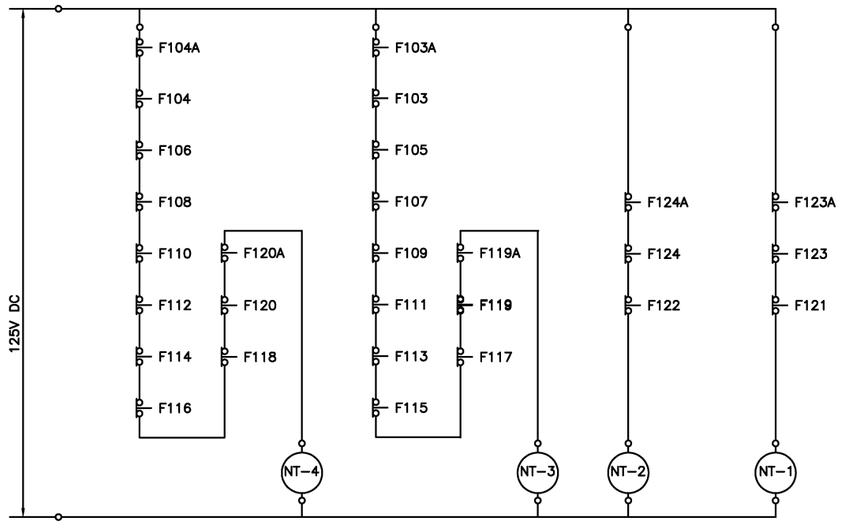

F09 TBS

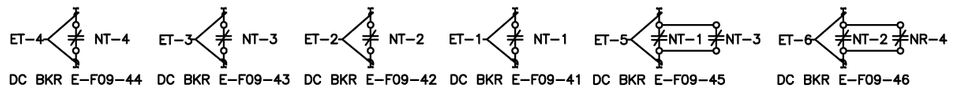

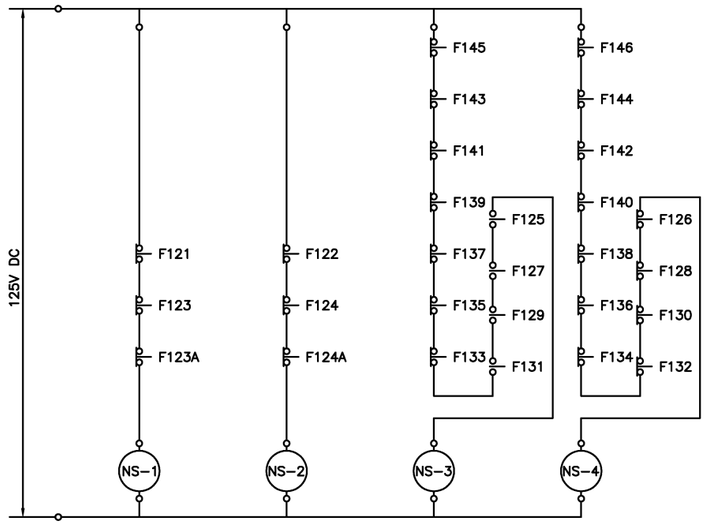

F09 TPS

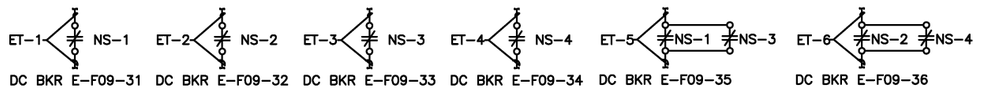

GENERAL NOTES:

1. NOMINAL VALUES OR VALUES FROM OTHER CONTRACTS USED BY WAY OF EXAMPLE. THE CONTRACTOR SHALL INSERT NAMES, LOCATIONS, VALUES AND DATA BASED ON THE DESIGN AND INSTALLATION FOR THIS PROJECT.
2. THIS DRAWING IS PROVIDED FOR ILLUSTRATION ONLY TO INDICATE TYPE AND APPEARANCE OF INFORMATION REQUIRED BY WMATA.

DESIGNED	P. ROY	2-01 DATE
DRAWN	L. POWELL	2-01 DATE
CHECKED	D. GLEN	2-01 DATE
APPROVED	R. GANERIWAL	2-01 DATE

REFERENCE DRAWINGS

NUMBER	DESCRIPTION

REVISIONS

DATE	BY	DESCRIPTION
08/2001	SYSP	Revised and issued by the Authority

WASHINGTON METROPOLITAN AREA TRANSIT AUTHORITY

DEPARTMENT OF TRANSIT SYSTEM DEVELOPMENT
OFFICE OF SYSTEMS

SUBMITTED _____ DATE

APPROVED _____ DIRECTOR May 3, 2001 DATE

TRACTION POWER SITE SPECIFIC DWG
EMERGENCY TRIP SWITCH
ELEMENTARY DIAGRAMS

SCALE: NONE

DRAWING NO.: ST-TP-SSI-021

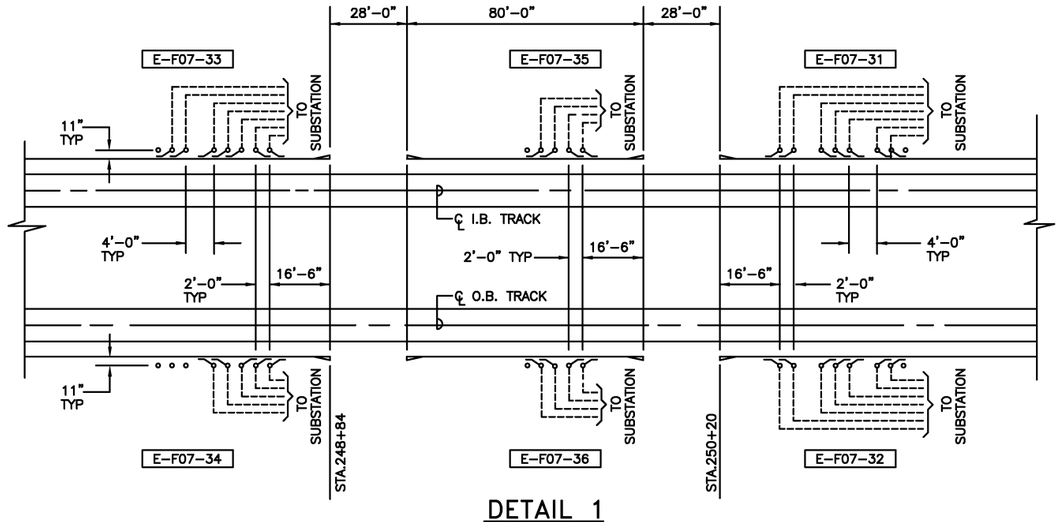

DETAIL 1
TRACTION POWER SUBSTATION
IN THE VICINITY OF STA.240+50

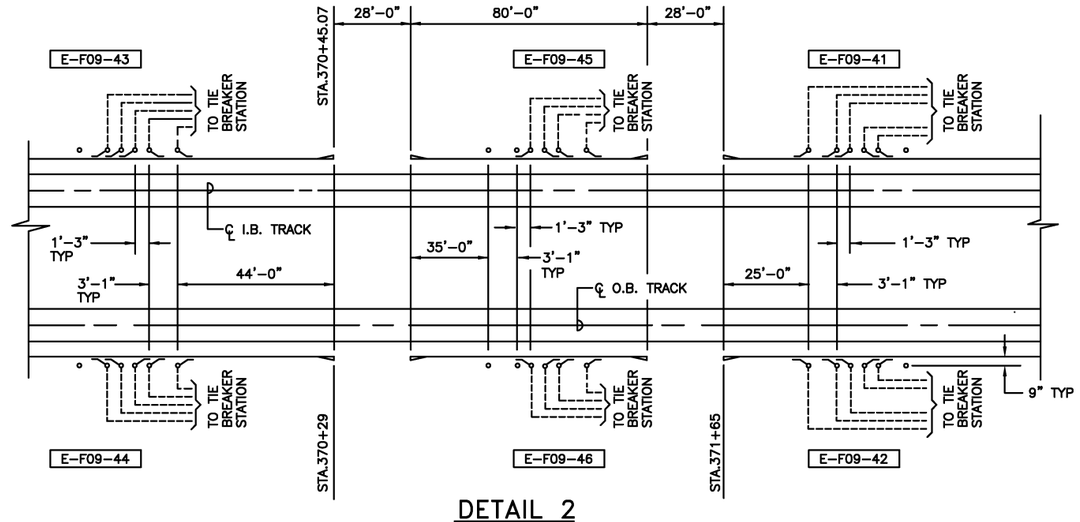

DETAIL 2
TIE BREAKER STATION
IN THE VICINITY OF STA.371+00

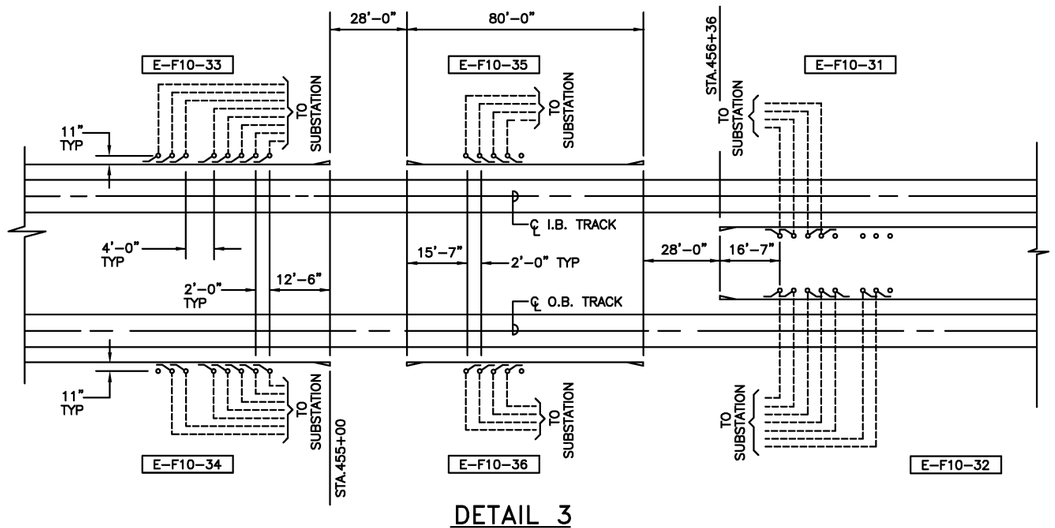

DETAIL 3
TRACTION POWER SUBSTATION
IN THE VICINITY OF STA.455+70

INSTALLATION OF CABLE IN CONDUIT AND CONNNECTIONS TO CONTACT RAIL

E-F07-32 INDICATES FEEDER BREAKER SUPERVISORY CONTROL IDENTIFICATION NUMBER.

GENERAL NOTES:

1. NOMINAL VALUES OR VALUES FROM OTHER CONTRACTS USED BY WAY OF EXAMPLE. THE CONTRACTOR SHALL INSERT NAMES, LOCATIONS, VALUES AND DATA BASED ON THE DESIGN AND INSTALLATION FOR THIS PROJECT.
2. THIS DRAWING IS PROVIDED FOR ILLUSTRATION ONLY TO INDICATE TYPE AND APPEARANCE OF INFORMATION REQUIRED BY WMATA.

DESIGNED	W. TINKHAM	2-01 DATE
DRAWN	L. POWELL	2-01 DATE
CHECKED	D. GLEN	2-01 DATE
APPROVED	R. GANERIWAL	2-01 DATE

REFERENCE DRAWINGS

NUMBER	DESCRIPTION

REVISIONS

DATE	BY	DESCRIPTION
08/2001	SYSP	Revised and issued by the Authority

WASHINGTON METROPOLITAN AREA TRANSIT AUTHORITY

DEPARTMENT OF TRANSIT SYSTEM DEVELOPMENT
OFFICE OF SYSTEMS

SUBMITTED _____ DATE

APPROVED DIRECTOR _____ May 3, 2001 DATE

TRACTION POWER SITE SPECIFIC DWG
CONTACT RAIL
GAP DETAILS

SCALE: NONE

DRAWING NO.: ST-TP-SSI-022

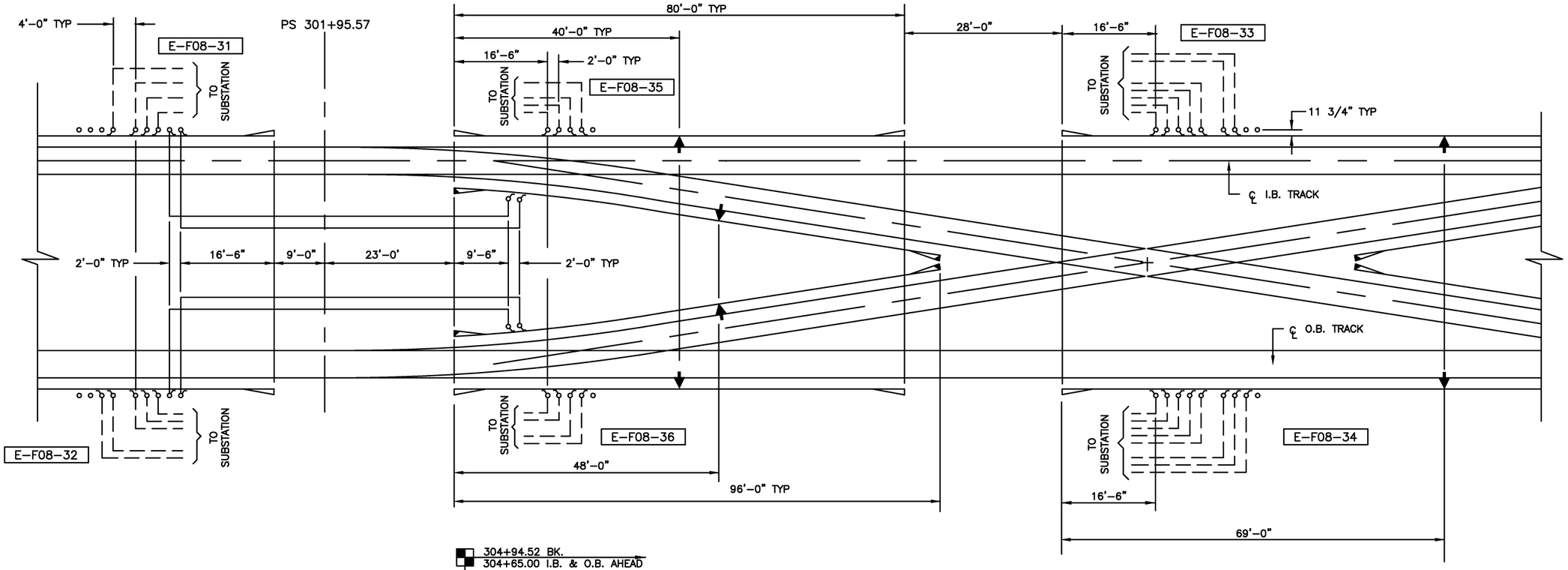

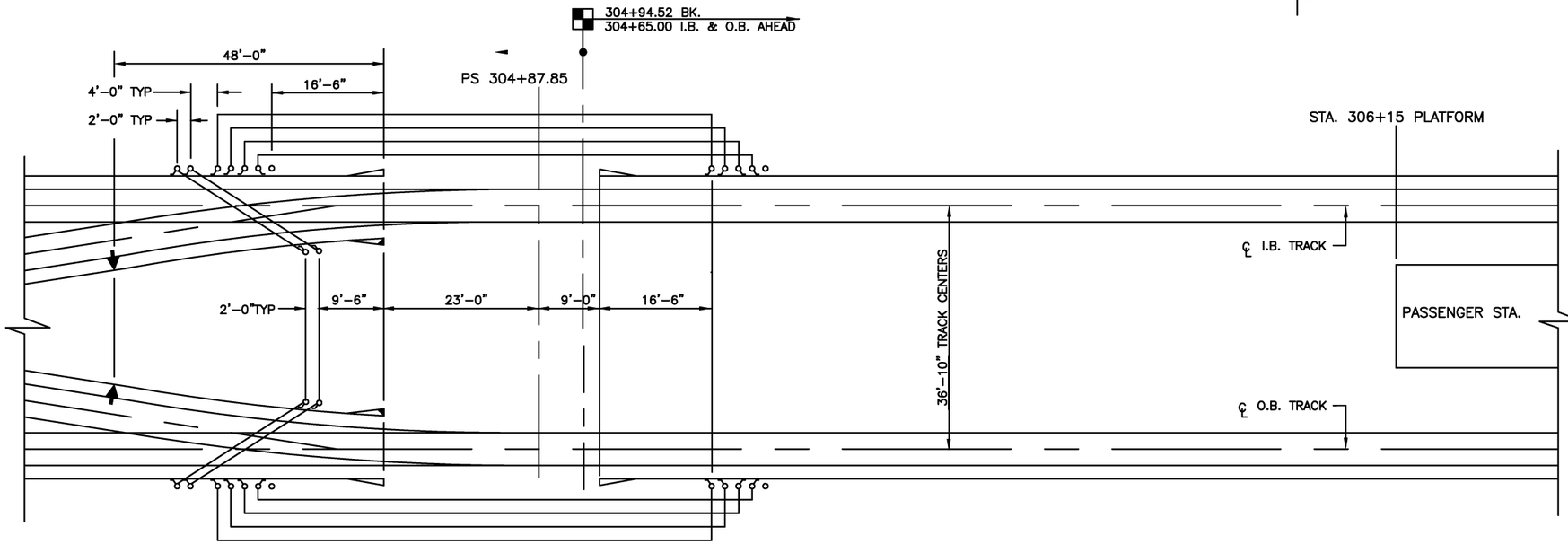

GENERAL NOTES:

1. NOMINAL VALUES OR VALUES FROM OTHER CONTRACTS USED BY WAY OF EXAMPLE. THE CONTRACTOR SHALL INSERT NAMES, LOCATIONS, VALUES AND DATA BASED ON THE DESIGN AND INSTALLATION FOR THIS PROJECT.
2. THIS DRAWING IS PROVIDED FOR ILLUSTRATION ONLY TO INDICATE TYPE AND APPEARANCE OF INFORMATION REQUIRED BY WMATA.

INSTALLATION OF CABLE IN CONDUIT AND CONNECTIONS TO CONTACT RAIL COMING FROM SUBSTATION

INSTALLATION OF CABLE IN CONDUIT AND CONNECTIONS TO CONTACT RAIL BETWEEN RAILS

E–F08–31 INDICATES FEEDER BREAKER SUPERVISORY CONTROL IDENTIFICATION NUMBER.

NO. 8 DOUBLE CROSSOVER

(FED FROM T.P. SUBSTATION)

DESIGNED	W. TINKHAM	2–01 DATE
DRAWN	L. POWELL	2–01 DATE
CHECKED	D. GLEN	2–01 DATE
APPROVED	R. GANERIWAL	2–01 DATE

REFERENCE DRAWINGS

NUMBER	DESCRIPTION

REVISIONS

DATE	BY	DESCRIPTION
08/2001	SYSP	Revised and issued by the Authority

WASHINGTON METROPOLITAN AREA TRANSIT AUTHORITY

DEPARTMENT OF TRANSIT SYSTEM DEVELOPMENT
OFFICE OF SYSTEMS

SUBMITTED _____ DATE

APPROVED DIRECTOR _____ May 3, 2001 DATE

TRACTION POWER SITE SPECIFIC DWG
CONTACT RAIL
CONTACT RAIL & CONDUIT ARRANGEMENT
NO. 8 DOUBLE CROSSOVER

SCALE: NOT TO SCALE

DRAWING NO.: ST–TP–SSI–023

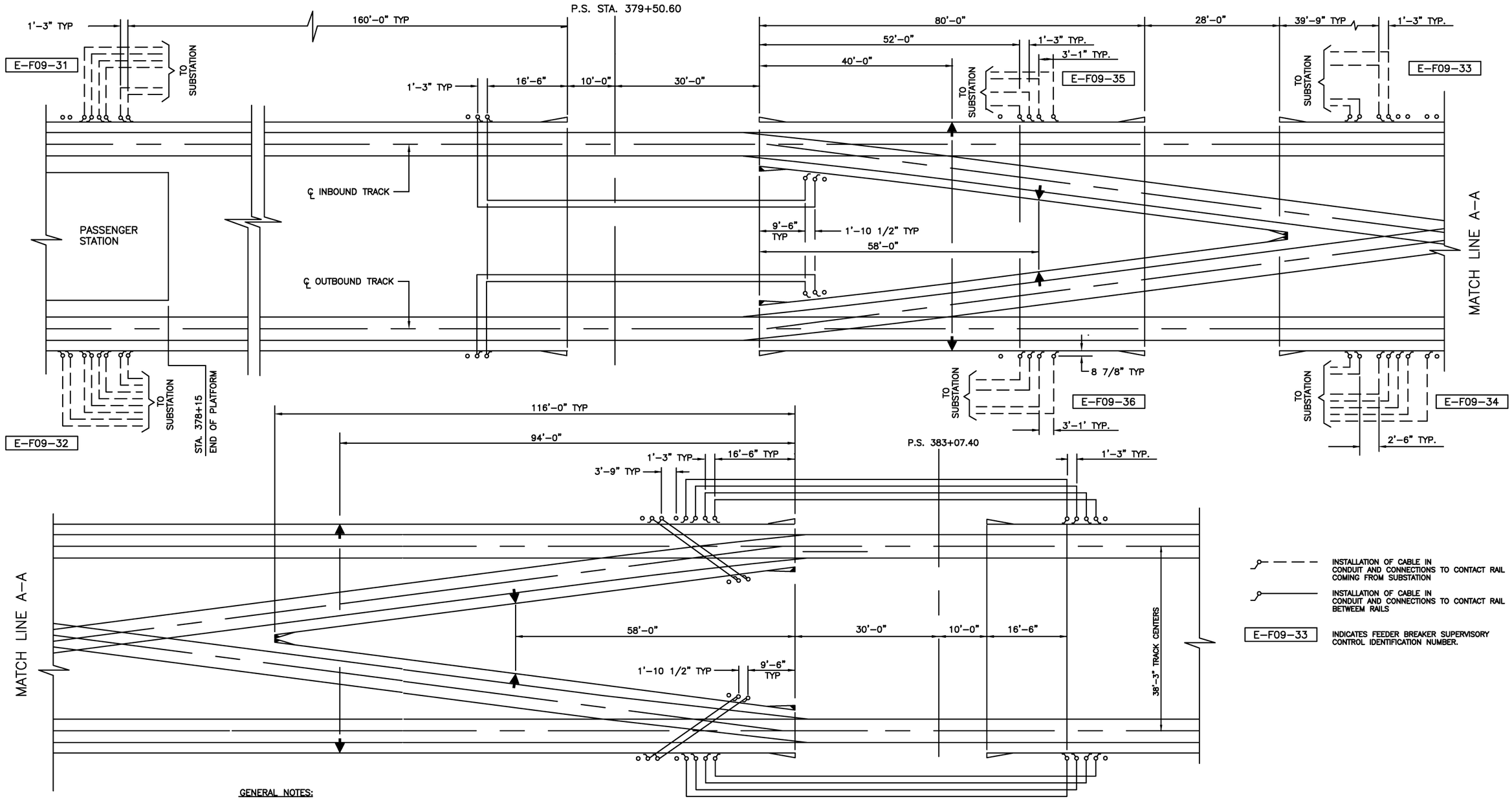

GENERAL NOTES:

1. NOMINAL VALUES OR VALUES FROM OTHER CONTRACTS USED BY WAY OF EXAMPLE. THE CONTRACTOR SHALL INSERT NAMES, LOCATIONS, VALUES AND DATA BASED ON THE DESIGN AND INSTALLATION FOR THIS PROJECT.
2. THIS DRAWING IS PROVIDED FOR ILLUSTRATION ONLY TO INDICATE TYPE AND APPEARANCE OF INFORMATION REQUIRED BY WMATA.

NO.10 DOUBLE CROSSOVER
FED FROM TRACTION POWER SUBSTATION

DESIGNED	W. TINKHAM	2-01 DATE
DRAWN	L. POWELL	2-01 DATE
CHECKED	D. GLEN	2-01 DATE
APPROVED	R. GANERIWAL	2-01 DATE

REFERENCE DRAWINGS

NUMBER	DESCRIPTION

REVISIONS

DATE	BY	DESCRIPTION
08/2001	SYSP	Revised and issued by the Authority

WASHINGTON METROPOLITAN AREA TRANSIT AUTHORITY

DEPARTMENT OF TRANSIT SYSTEM DEVELOPMENT
OFFICE OF SYSTEMS

SUBMITTED _____ DATE

APPROVED _____ DIRECTOR May 3, 2001 DATE

TRACTION POWER SITE SPECIFIC DWG
CONTACT RAIL
CONTACT RAIL & CONDUIT ARRANGEMENT
NO.10 DOUBLE CROSSOVER

SCALE: NOT TO SCALE

DRAWING NO.: ST-TP-SSI-024

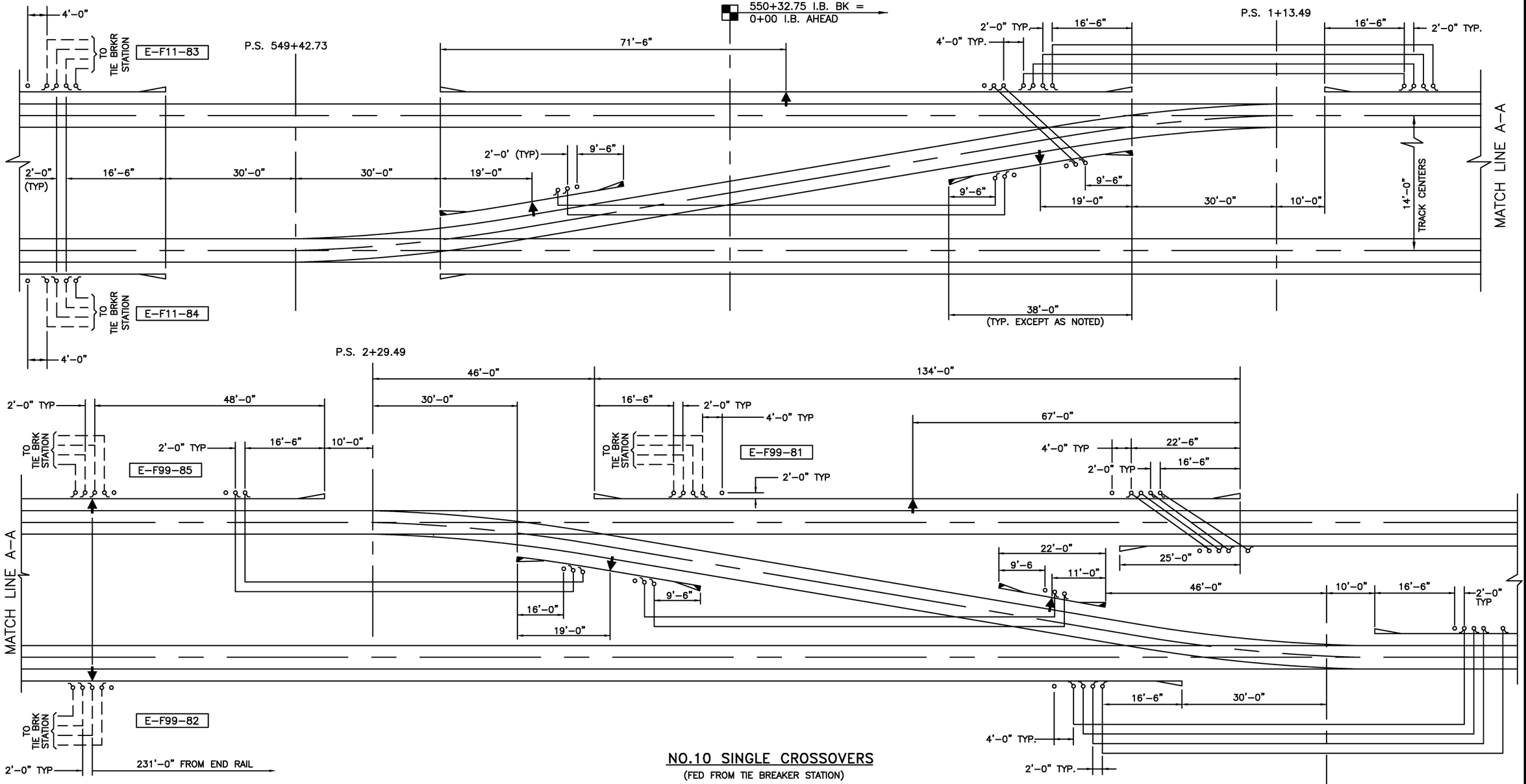

NO.10 SINGLE CROSSOVERS

(FED FROM TIE BREAKER STATION)

GENERAL NOTES:

1. NOMINAL VALUES OR VALUES FROM OTHER CONTRACTS USED BY WAY OF EXAMPLE. THE CONTRACTOR SHALL INSERT NAMES, LOCATIONS, VALUES AND DATA BASED ON THE DESIGN AND INSTALLATION FOR THIS PROJECT.
2. THIS DRAWING IS PROVIDED FOR ILLUSTRATION ONLY TO INDICATE TYPE AND APPEARANCE OF INFORMATION REQUIRED BY WMATA.

———	INSTALLATION OF CABLE IN CONDUIT AND CONNECTIONS TO CONTACT RAIL COMING FROM TIE BREAKER STATION
———	INSTALLATION OF CABLE IN CONDUIT AND CONNECTIONS TO CONTACT RAIL BETWEEN RAILS
E–F11–83	INDICATES FEEDER BREAKER SUPERVISORY CONTROL IDENTIFICATION NUMBER

DESIGNED	W. TINKHAM	2–01 DATE
DRAWN	L. POWELL	2–01 DATE
CHECKED	D. GLEN	2–01 DATE
APPROVED	R. GANERIWAL	2–01 DATE

REFERENCE DRAWINGS

NUMBER	DESCRIPTION

REVISIONS

DATE	BY	DESCRIPTION
08/2001	SYSP	Revised and issued by the Authority

WASHINGTON METROPOLITAN AREA TRANSIT AUTHORITY

DEPARTMENT OF TRANSIT SYSTEM DEVELOPMENT
OFFICE OF SYSTEMS

SUBMITTED _____ DATE

APPROVED _____ DIRECTOR May 3, 2001 DATE

TRACTION POWER SITE SPECIFIC DWG
CONTACT RAIL
CONTACT RAIL & CONDUIT ARRANGEMENT
NO.10 SINGLE CROSSOVER

SCALE: NOT TO SCALE

DRAWING NO.: ST–TP–SSI–025

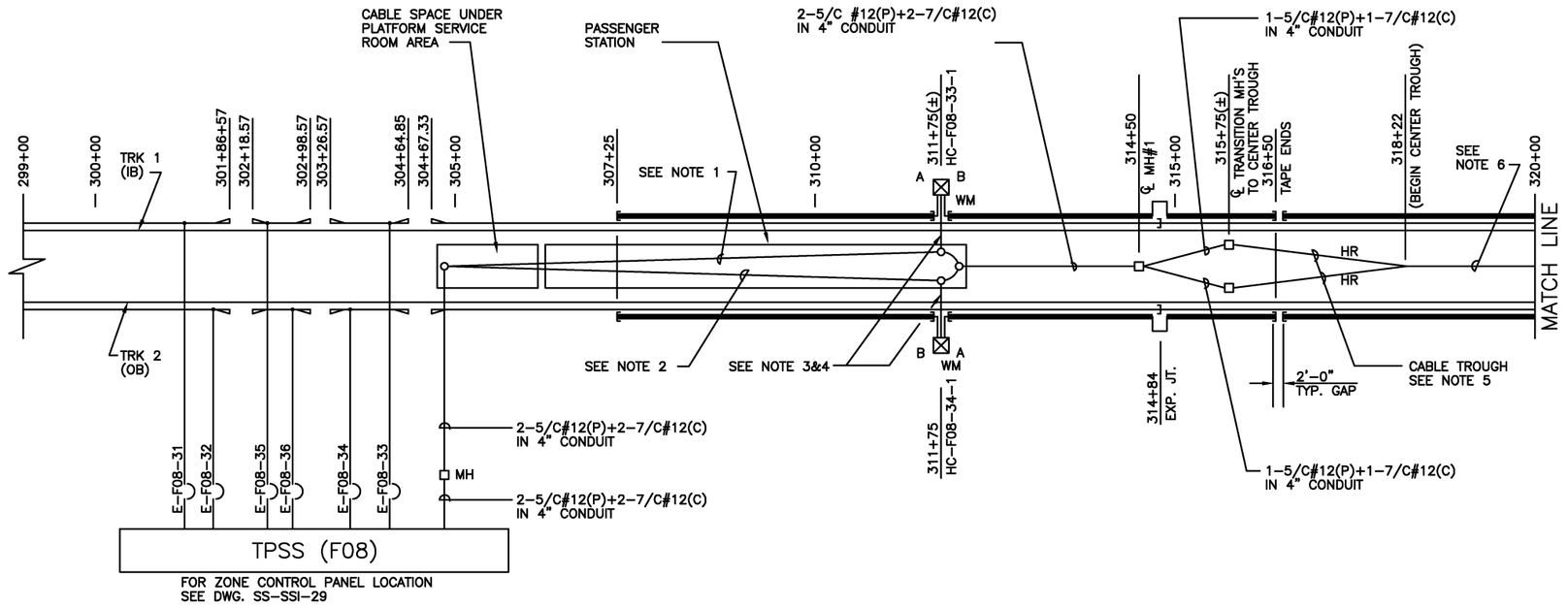

NOTES:

1. 1-5/C#12(P)+1-7/C#12(C) VIA UNDERPLATFORM CABLE SPACE AND 4" CONDUIT
2. 1-5/C#12(P)+1-7/C#12(C) VIA UNDERPLATFORM CABLE SPACE AND 4" CONDUIT
3. 1-2" (CONTROL) AND 1-2"C (POWER) FROM UNDERPLATFORM CABLE SPACE TO STUB-UP AT WALL.
4. 1-5/C#12(P) VIA 2"C AND 1-7/C#12(C) VIA 2" CONDUIT FOR IB TRK. TYP. FOR OB TRK.
5. 1-5/C#12(P)+1-7/C#12(C) IN EACH TROUGH TO CENTER CABLE TROUGH BETWEEN IB & OB TRACKS.
6. 2-5/C#12(P)+2-7/C#12#(C) IN CENTER CABLE TROUGH.
7. INSTALL RAIL HEATER PANEL AT CENTER SAFETY WALK HANDRAIL
8. FOR RAIL NEGATIVE (RN) CABLE INSTALL 1-1" FRE CONDUIT TO FUSE BOX DISCONNECT. ATTACH CABLE TO RUNNING RAIL. FASTEN CONDUIT TO CONCRETE INVERT.
9. FOR HEATER NEGATIVE (HN) CABLE INSTALL 1-1" FRE CONDUIT TO FUSE BOX, FASTEN CONDUIT TO CONCRETE INVERT.

GENERAL NOTES:

1. NOMINAL VALUES OR VALUES FROM OTHER CONTRACTS USED BY WAY OF EXAMPLE. THE CONTRACTOR SHALL INSERT NAMES, LOCATIONS, VALUES AND DATA BASED ON THE DESIGN AND INSTALLATION FOR THIS PROJECT.
2. THIS DRAWING IS PROVIDED FOR ILLUSTRATION ONLY TO INDICATE TYPE AND APPEARANCE OF INFORMATION REQUIRED BY WMATA.

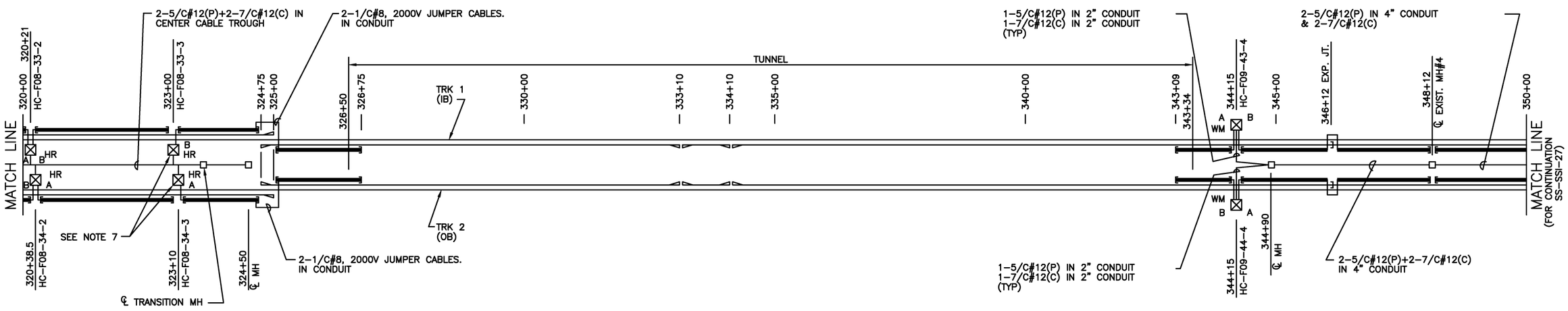

DESIGNED	D. VANCOTT	2-01 DATE
DRAWN	L. POWELL	2-01 DATE
CHECKED	W. TINKHAM	2-01 DATE
APPROVED	R. GANERIWAL	2-01 DATE

REFERENCE DRAWINGS

NUMBER	DESCRIPTION

REVISIONS

DATE	BY	DESCRIPTION
08/2001	SYSP	Revised and issued by the Authority

WASHINGTON METROPOLITAN AREA TRANSIT AUTHORITY

DEPARTMENT OF TRANSIT SYSTEM DEVELOPMENT
OFFICE OF SYSTEMS

SUBMITTED _____ DATE

APPROVED DIRECTOR _____ May 3, 2001 DATE

TRACTION POWER SITE SPECIFIC DWG
CONTACT RAIL HEATING PLAN SHEET-1

SCALE: NO SCALE

DRAWING NO.: ST-TP-SSI-026

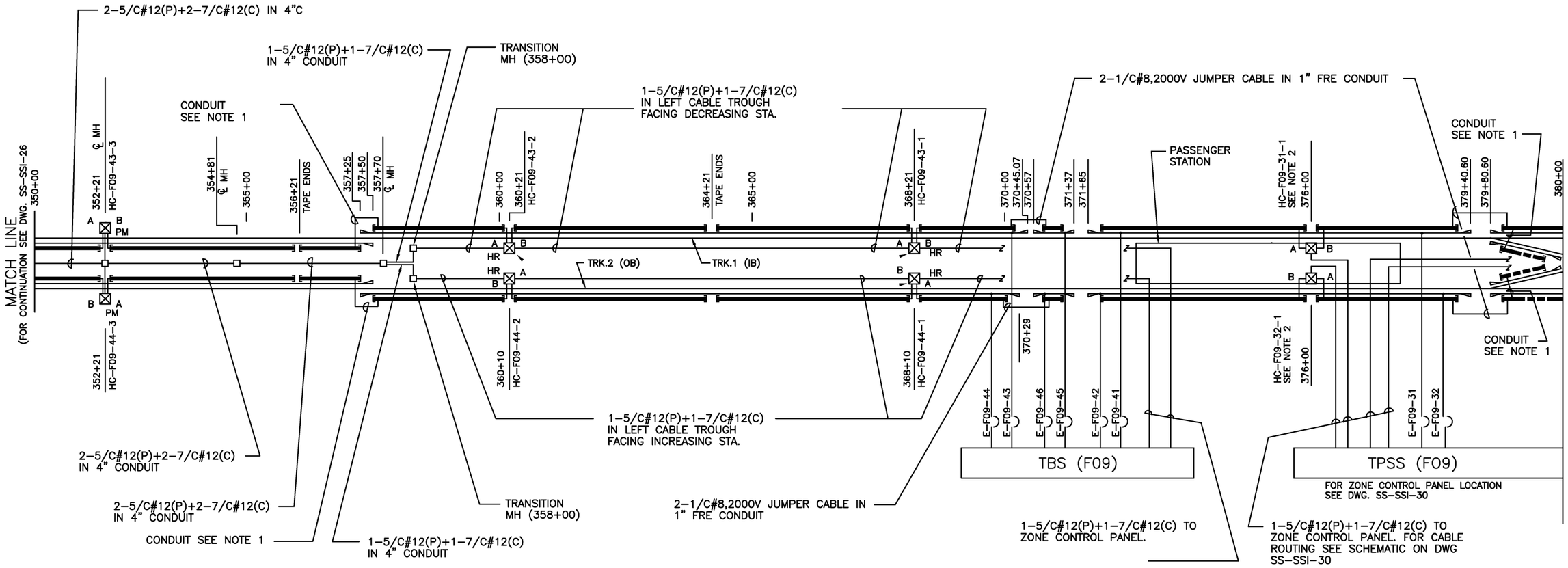

NOTE:

1. INSTALL 2-1/C#8, 2000V JUMPER CABLES VIA CONDUIT.
2. INSTALL TRACKSIDE HEATER CONTROL PANEL ON ACOUSTICAL BARRIERS.

GENERAL NOTES:

1. NOMINAL VALUES OR VALUES FROM OTHER CONTRACTS USED BY WAY OF EXAMPLE. THE CONTRACTOR SHALL INSERT NAMES, LOCATIONS, VALUES AND DATA BASED ON THE DESIGN AND INSTALLATION FOR THIS PROJECT.
2. THIS DRAWING IS PROVIDED FOR ILLUSTRATION ONLY TO INDICATE TYPE AND APPEARANCE OF INFORMATION REQUIRED BY WMATA.

DESIGNED D. VANCOTT 2-01 DATE	REFERENCE DRAWINGS	REVISIONS
DRAWN L. POWELL 2-01 DATE	NUMBER / DESCRIPTION	DATE / BY / DESCRIPTION
CHECKED W. TINKHAM 2-01 DATE		08/2001 SYSP Revised and issued by the Authority
APPROVED R. GANERIWAL 2-01 DATE		

WASHINGTON METROPOLITAN AREA TRANSIT AUTHORITY

DEPARTMENT OF TRANSIT SYSTEM DEVELOPMENT
OFFICE OF SYSTEMS

SUBMITTED _____ DATE

APPROVED _____ DIRECTOR May 3, 2001 DATE

TRACTION POWER SITE SPECIFIC DWG
CONTACT RAIL HEATING PLAN
SHEET-2

SCALE NO SCALE

DRAWING NO. ST-TP-SSI-027

CONTACT RAIL HEATER SCHEDULE

TRACKSIDE HEATER CONTROL PANEL NUMBER	SIDE 'A'				SIDE 'B'				REMARKS
	HEATING TAPE LGTH–FT	JUMPER CABLE OVER OR TO	JUMPER CABLE LGTH–FT	FUSE SIZE	HEATING TAPE LGTH–FT	JUMPER CABLE OVER OR TO	JUMPER CABLE LGTH–FT	FUSE SIZE	
HC–F08–33–1	450			30	309	EXPANSION JOINT	22	35	
					166				
HC–F08–33–2	369			30	272			20	
HC–F08–33–3	–				190	TRANSITION	30	30	
					190				
HC–F08–34–1	309	EXPANSION JOINT	22	35	450			30	
	166								
HC–F08–34–2	272			20	386			30	
HC–F08–34–3	180	TRANSITION	30	30					
	190								
HC–F09–43–1	400			30	214	JUMPER	20	20	
					58				
HC–F09–43–2	274	TRANSITION	30	30	400			30	
	115								
HC–F09–43–3	409			30	400			30	
HC–F09–43–4	106			15	197			30	
					200	EXPANSION JOINT	22		
HC–F09–44–1	214	JUMPER	20	20	389			30	
	58								
HC–F09–44–2	411			30	274	TRANSITION	30	30	
					115				
HC–F09–44–3	400			30	409			30	
HC–F09–44–4	197	EXPANSION JOINT		30	106			15	
	200								

GENERAL NOTES:

1. NOMINAL VALUES OR VALUES FROM OTHER CONTRACTS USED BY WAY OF EXAMPLE. THE CONTRACTOR SHALL INSERT NAMES, LOCATIONS, VALUES AND DATA BASED ON THE DESIGN AND INSTALLATION FOR THIS PROJECT.
2. THIS DRAWING IS PROVIDED FOR ILLUSTRATION ONLY TO INDICATE TYPE AND APPEARANCE OF INFORMATION REQUIRED BY WMATA.

CONTACT RAIL HEATER SCHEDULE

TRACKSIDE HEATER CONTROL PANEL NUMBER	SIDE 'A'				SIDE 'B'				REMARKS
	HEATING TAPE LGTH–FT	JUMPER CABLE OVER OR TO	JUMPER CABLE LGTH–FT	FUSE SIZE	HEATING TAPE LGTH–FT	JUMPER CABLE OVER OR TO	JUMPER CABLE LGTH–FT	FUSE SIZE	
HC–F09–31–1	424			30	330			35	
					58	JUMPER	50		
					105	KICKER RAIL	70		
HC–F09–32–1	330			35	424			30	
	58	JUMPER	50						
	105	KICKER RAIL	70						
HC–F09–33–1	72			25	250			20	
	168	JUMPER	40						
	105	KICKER RAIL	50						
HC–F09–33–2	263			20	400			30	
HC–F09–33–3	392			30	60			30	
					359	TRANSITION	30		
HC–F09–33–4	420			30	235	EXPANSION JOINT	22	30	
					133				
HC–F09–33–5	367			30	400			30	
HC–F09–34–1	250			20	72			25	
					168	TRANSITION	40		
					105	KICKER RAIL	50		
HC–F09–34–2	400			30	263			20	
HC–F09–34–3	60			30	392			30	
	359	TRANSITION	30						
HC–F09–34–4	235	EXPANSION JOINT	22	30	420			30	
	133								
HC–F09–34–5	400			30	367			30	

NOTES:

1. FUSE SIZES SHOWN ARE APPROXIMATE. PROVIDE NEXT LARGER FUSE SIZE WHEN ACTUAL HEAT TAPE LENGTH EXCEEDS LENGTH SHOWN IN SCHEDULE.

TAPE LENGTH PER SIDE	FUSE SIZE (AMP)
0 FT TO 240 FT	15
241 FT TO 300 FT	20
301 FT TO 360 FT	25
361 FT TO 450 FT	30
451 FT TO 500 FT (MAXIMUM)	35

DESIGNED W. TINKHAM 2–01 DATE
DRAWN L. POWELL 2–01 DATE
CHECKED D. GLEN 2–01 DATE
APPROVED R. GANERIWAL 2–01 DATE

REFERENCE DRAWINGS

NUMBER	DESCRIPTION

REVISIONS

DATE	BY	DESCRIPTION
08/2001	SYSP	Revised and issued by the Authority

WASHINGTON METROPOLITAN AREA TRANSIT AUTHORITY

DEPARTMENT OF TRANSIT SYSTEM DEVELOPMENT
OFFICE OF SYSTEMS

SUBMITTED DATE

APPROVED DIRECTOR May 3, 2001 DATE

TRACTION POWER SITE SPECIFIC DWG
CONTACT RAIL HEATING
CONTACT RAIL HEATER SCHEDULE

SCALE NO SCALE

DRAWING NO. ST–TP–SSI–028

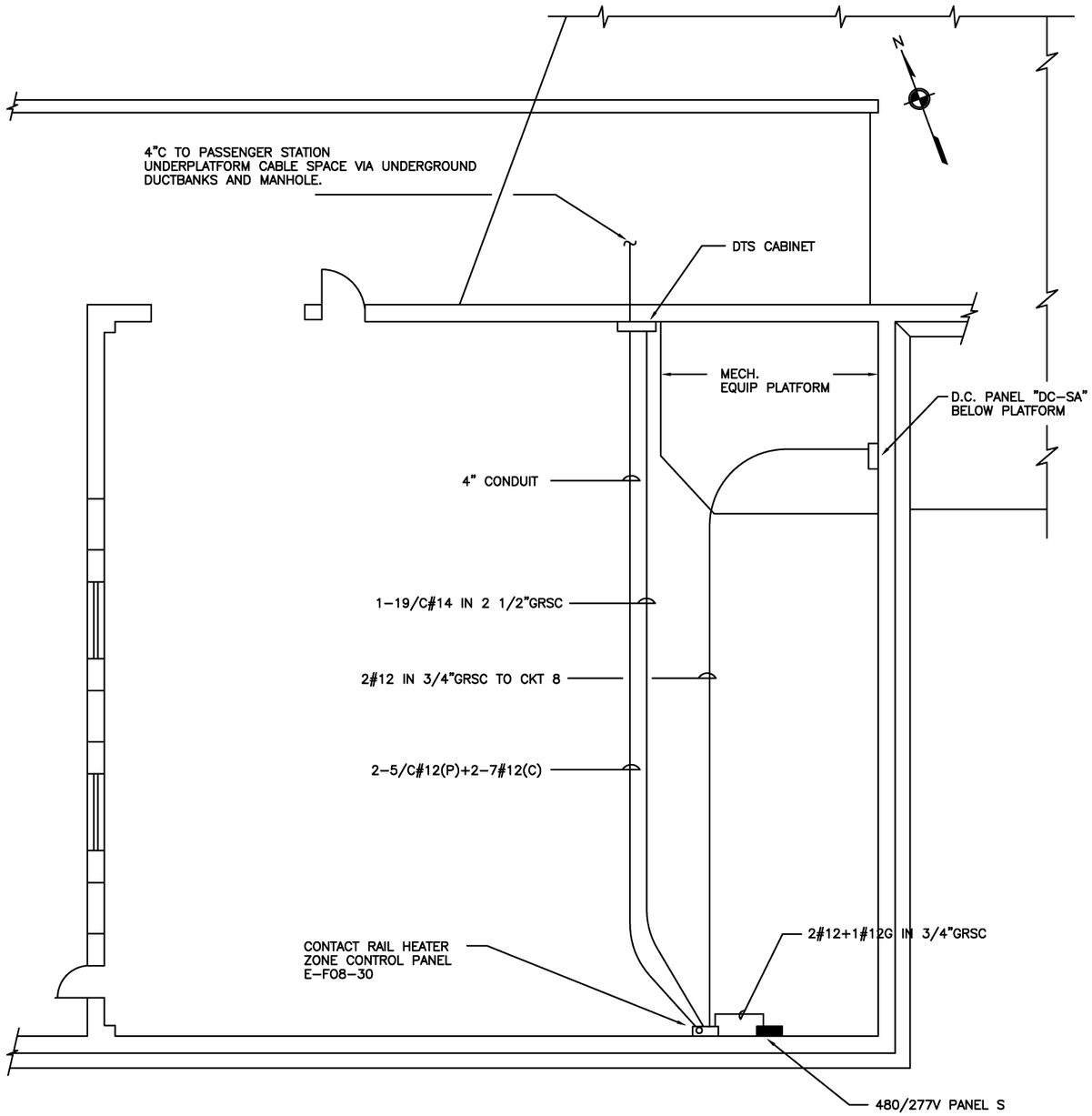

TRACTION POWER SUBSTATION PLAN (F08)

GENERAL NOTES:

1. NOMINAL VALUES OR VALUES FROM OTHER CONTRACTS USED BY WAY OF EXAMPLE. THE CONTRACTOR SHALL INSERT NAMES, LOCATIONS, VALUES AND DATA BASED ON THE DESIGN AND INSTALLATION FOR THIS PROJECT.
2. THIS DRAWING IS PROVIDED FOR ILLUSTRATION ONLY TO INDICATE TYPE AND APPEARANCE OF INFORMATION REQUIRED BY WMATA.

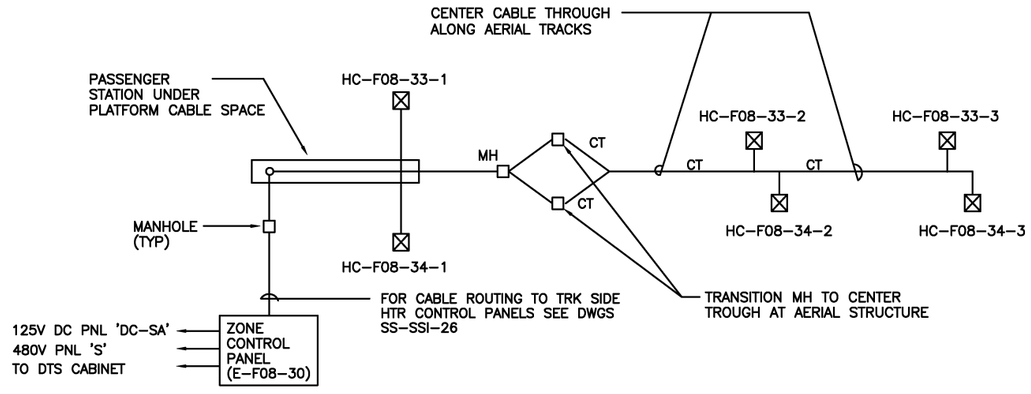

TPSS (F08)
POWER, CONTROL & INDICATION WIRING DIAGRAM
NOT TO SCALE

DESIGNED	D. VANCOTT	2-01 DATE
DRAWN	L. POWELL	2-01 DATE
CHECKED	D. GLEN	2-01 DATE
APPROVED	R. GANERIWAL	2-01 DATE

REFERENCE DRAWINGS

NUMBER	DESCRIPTION

REVISIONS

DATE	BY	DESCRIPTION
08/2001	SYSP	Revised and issued by the Authority

WASHINGTON METROPOLITAN AREA TRANSIT AUTHORITY

DEPARTMENT OF TRANSIT SYSTEM DEVELOPMENT
OFFICE OF SYSTEMS

SUBMITTED _____ DATE

APPROVED _____ DIRECTOR May 3, 2001 DATE

TRACTION POWER SITE SPECIFIC DWG
CONTACT RAIL HEATING
ABOVE GROUND REMOTE TPS ZONE CONTROL PANEL LOCATION & WIRING

SCALE 3/16"=1'-0"

DRAWING NO. ST-TP-SSI-029

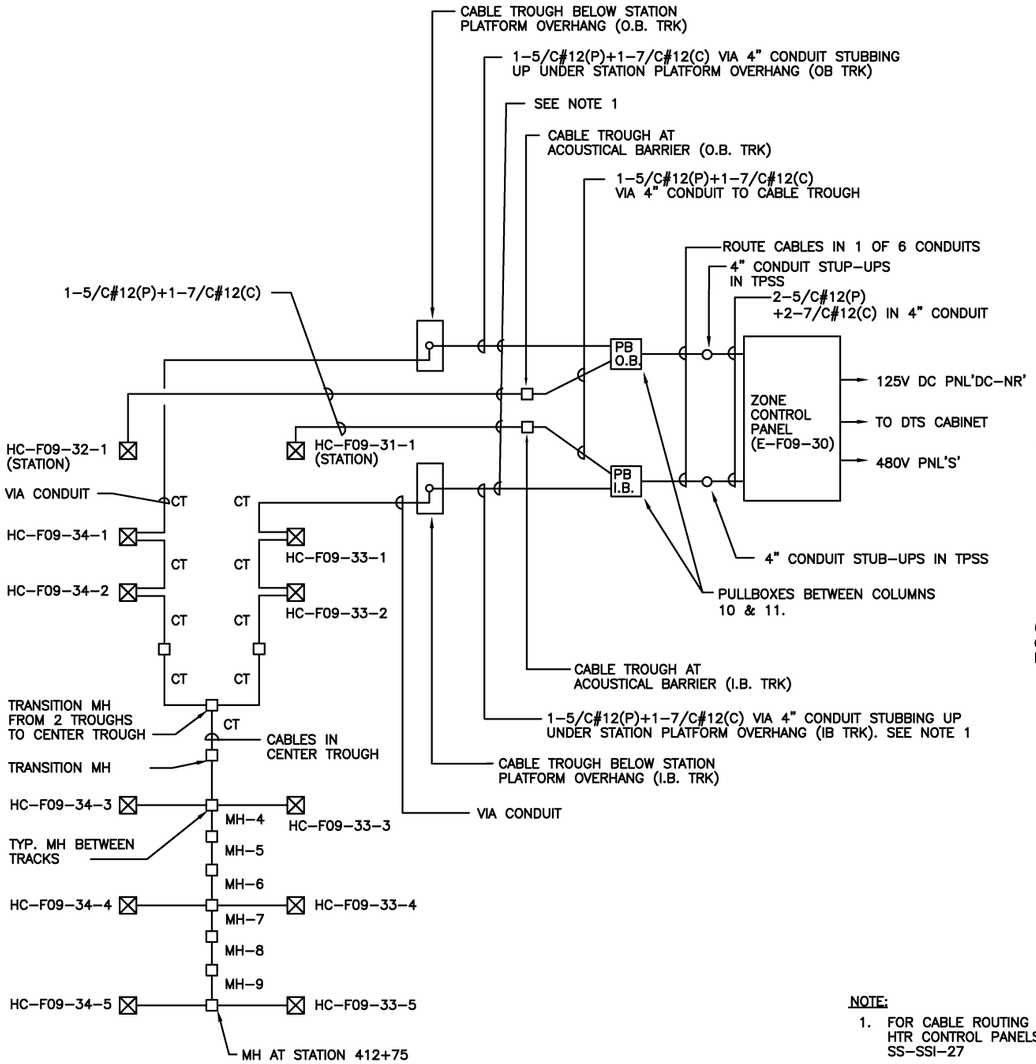

SUBSTATION PLAN (F09) POWER, CONTROL & INDICATION WIRING DIAGRAM

NOT TO SCALE

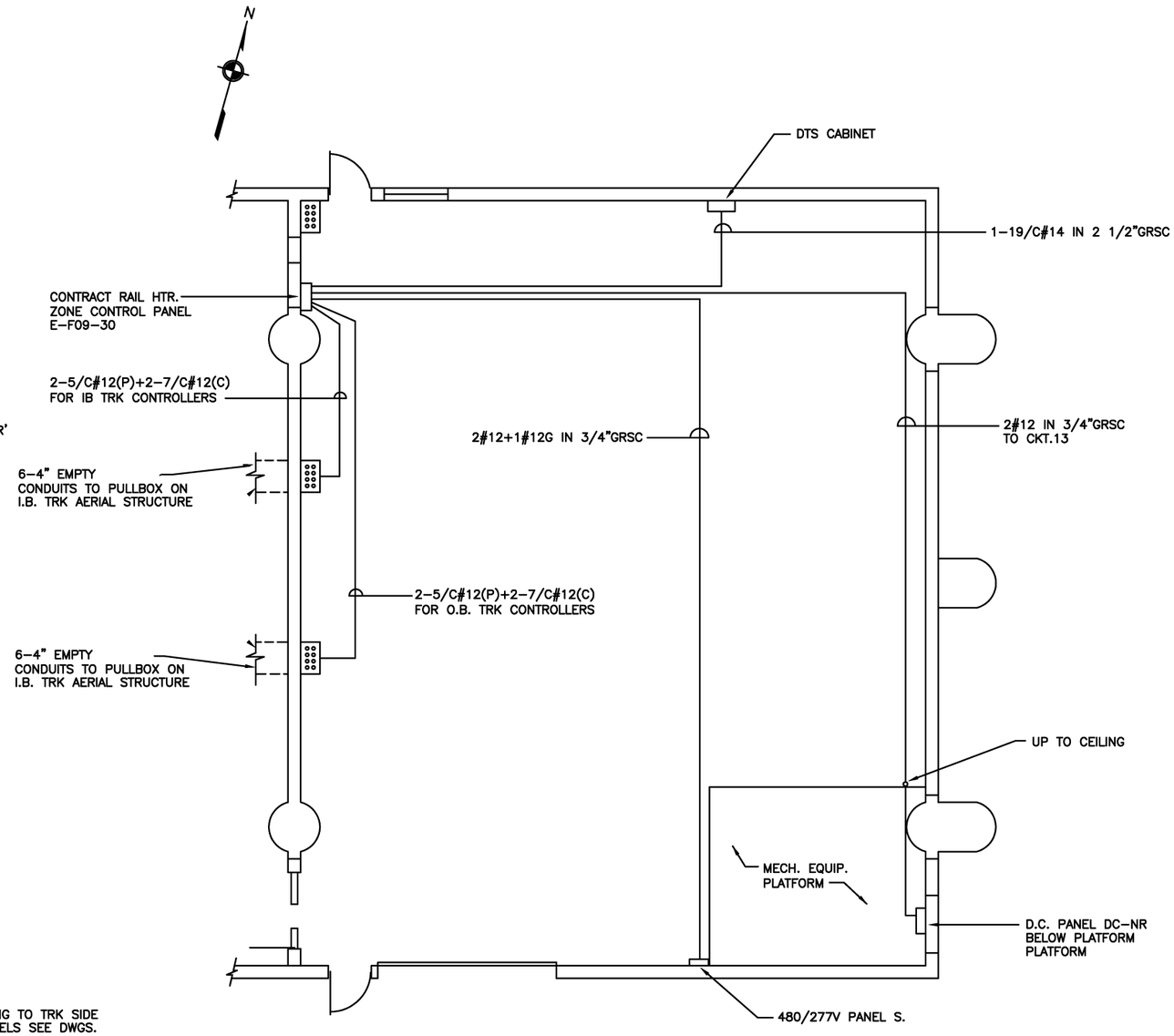

NOTE:

1. FOR CABLE ROUTING TO TRK SIDE HTR CONTROL PANELS SEE DWGS. SS-SSI-27

GENERAL NOTES:

1. NOMINAL VALUES OR VALUES FROM OTHER CONTRACTS USED BY WAY OF EXAMPLE. THE CONTRACTOR SHALL INSERT NAMES, LOCATIONS, VALUES AND DATA BASED ON THE DESIGN AND INSTALLATION FOR THIS PROJECT.
2. THIS DRAWING IS PROVIDED FOR ILLUSTRATION ONLY TO INDICATE TYPE AND APPEARANCE OF INFORMATION REQUIRED BY WMATA.

SUBSTATION PLAN (F09)

DESIGNED	D. VANCOTT	2-01 DATE
DRAWN	R. THOMAS, JR.	2-01 DATE
CHECKED	D. GLEN	2-01 DATE
APPROVED	R. GANERIWAL	2-01 DATE

REFERENCE DRAWINGS

NUMBER	DESCRIPTION

REVISIONS

DATE	BY	DESCRIPTION
08/2001	SYSP	Revised and issued by the Authority

WASHINGTON METROPOLITAN AREA TRANSIT AUTHORITY

DEPARTMENT OF TRANSIT SYSTEM DEVELOPMENT
OFFICE OF SYSTEMS

SUBMITTED _____ DATE

APPROVED _____ DIRECTOR May 3, 2001 DATE

TRACTION POWER SITE SPECIFIC DWG
CONTACT RAIL HEATING
ABOVE GROUND IN-LINE(PS) TPS
ZONE CONTROL PANEL LOCATION & WIRING

SCALE 3/16"=1'-0"

DRAWING NO. ST-TP-SSI-030

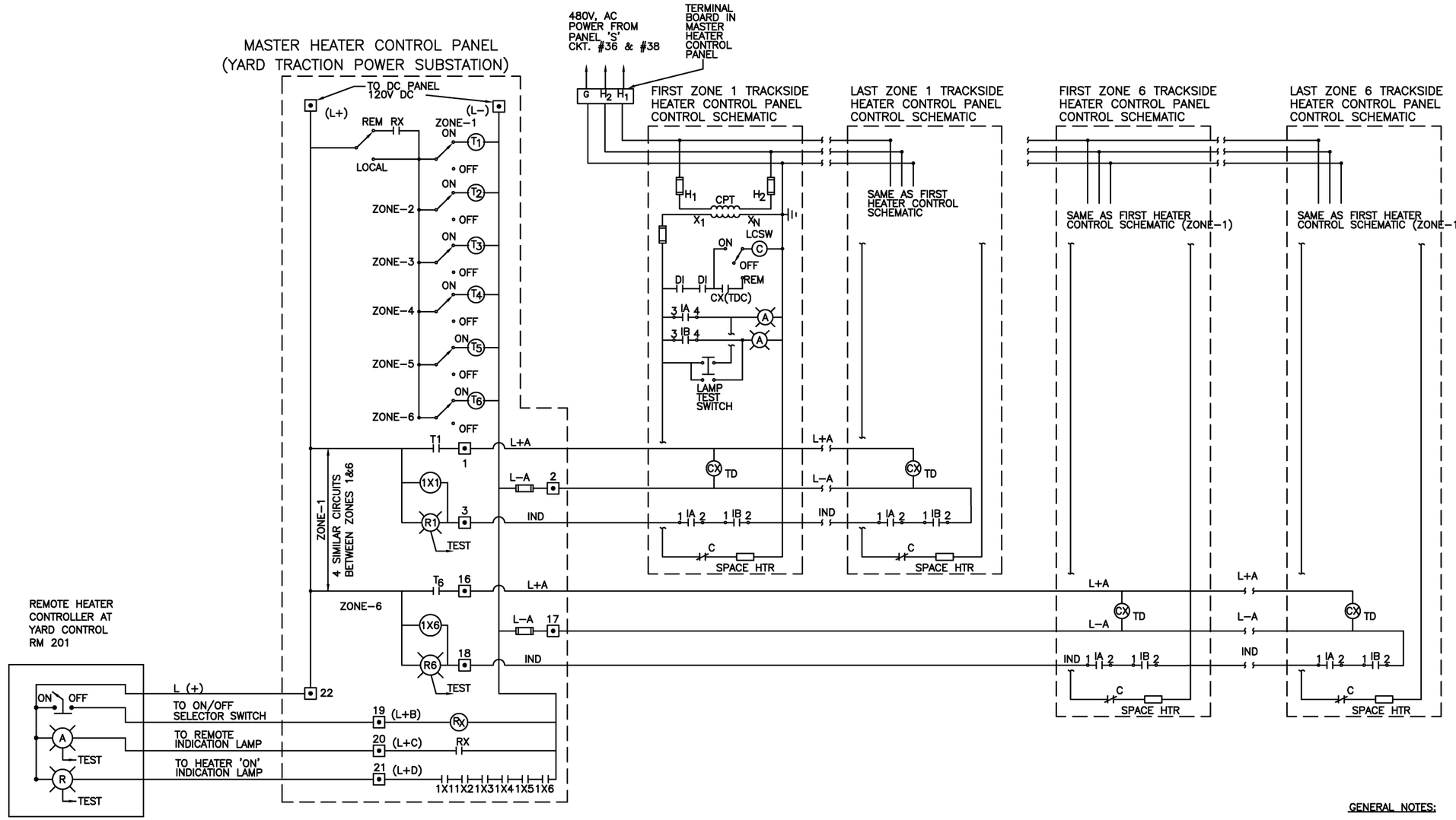

SYMBOL & ABBREVIATIONS

C –	1000V DC CONTACTOR
IA,IB –	MAGNETIC CURRENT RELAYS
DI –	DOOR INTERLOCK
LCSW –	LOCAL CONTROL SWITCH–(ON–OFF–REMOTE)
(R) –	IND. LAMP (R–RED, A–AMBER)
(R) – TEST	PUSH TO TEST LAMP
CX –	AUXILIARY TIME DELAY RELAY, WITH ON DELAY OR TDC CONTACTS
CPT –	CONTROL POWER TRANSFORMER, 480V –120V, 100VA
–▭–	FUSE
T1–T6	AUXILIARY TIME DELAY RELAYS (ZONE 1 THRU ZONE 6)
(1X1)(1X6) –	AUX. RELAYS FOR CURRENT INDICATION (ZONE 1 THRU ZONE 6)
7 ⊡ –	TERM. BOARD NUMBERS FOR REMOTE CONNECTIONS REQUIRED FROM MASTER CONTROL PANEL
TD –	TIME DELAY
TDC –	TIME DELAY CLOSING
RX –	RELAY FOR REMOTE OPERATION

GENERAL NOTES:

1. NOMINAL VALUES OR VALUES FROM OTHER CONTRACTS USED BY WAY OF EXAMPLE. THE CONTRACTOR SHALL INSERT NAMES, LOCATIONS, VALUES AND DATA BASED ON THE DESIGN AND INSTALLATION FOR THIS PROJECT.
2. THIS DRAWING IS PROVIDED FOR ILLUSTRATION ONLY TO INDICATE TYPE AND APPEARANCE OF INFORMATION REQUIRED BY WMATA.

DESIGNED	D. VANCOTT	2–01 DATE
DRAWN	L. POWELL	2–01 DATE
CHECKED	B. TINKHAM	2–01 DATE
APPROVED	R. GANERIWAL	2–01 DATE

REFERENCE DRAWINGS

NUMBER	DESCRIPTION

REVISIONS

DATE	BY	DESCRIPTION
08/2001	SYSP	Revised and issued by the Authority

WASHINGTON METROPOLITAN AREA TRANSIT AUTHORITY

DEPARTMENT OF TRANSIT SYSTEM DEVELOPMENT
OFFICE OF SYSTEMS

SUBMITTED _____ DATE

APPROVED _____ DIRECTOR May 3, 2001 DATE

TRACTION POWER SITE SPECIFIC DWG
CONTACT RAIL HEATING
YARD TRACKSIDE HEATER & MASTER CONTROL PANEL SCHEMATIC

SCALE	DRAWING NO.
NONE	ST–TP–SSI–031

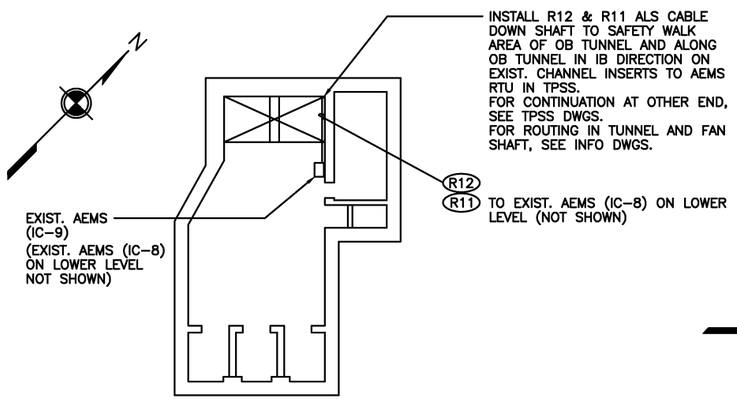

FAN SHAFT
FAN ROOM PLAN – UPPER LEVEL (SHOWN)
FAN ROOM PLAN – LOWER LEVEL (SIMILAR)

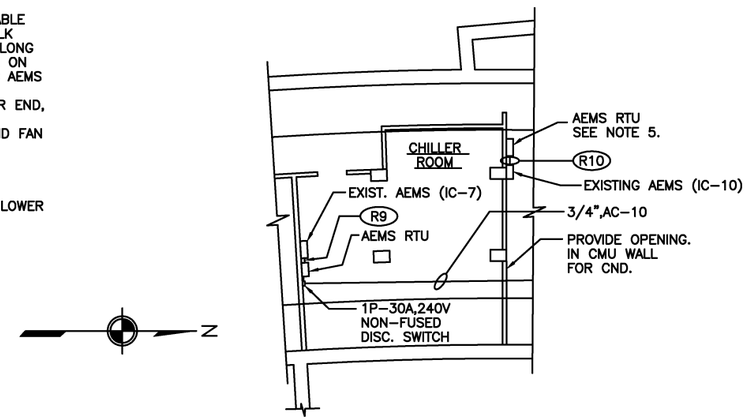

PASSENGER STATION
NORTH SERVICE ROOMS–MEZZANINE LEVEL–PARTIAL PLAN

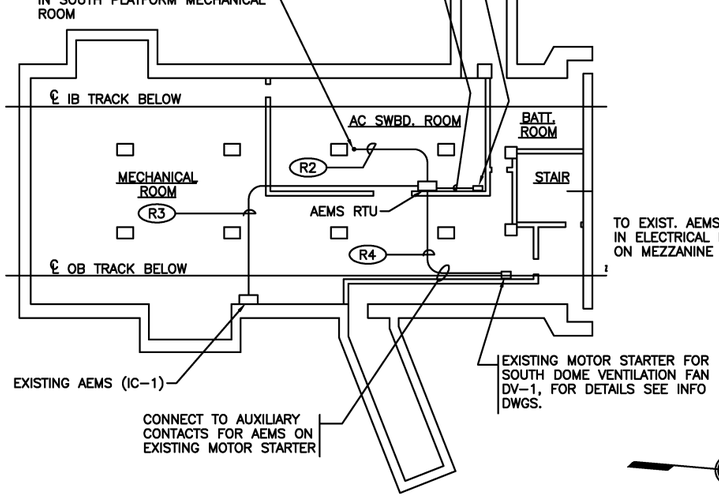

PASSENGER STATION
SOUTH SERVICE ROOMS – MEZZANINE LEVEL – PARTIAL PLAN

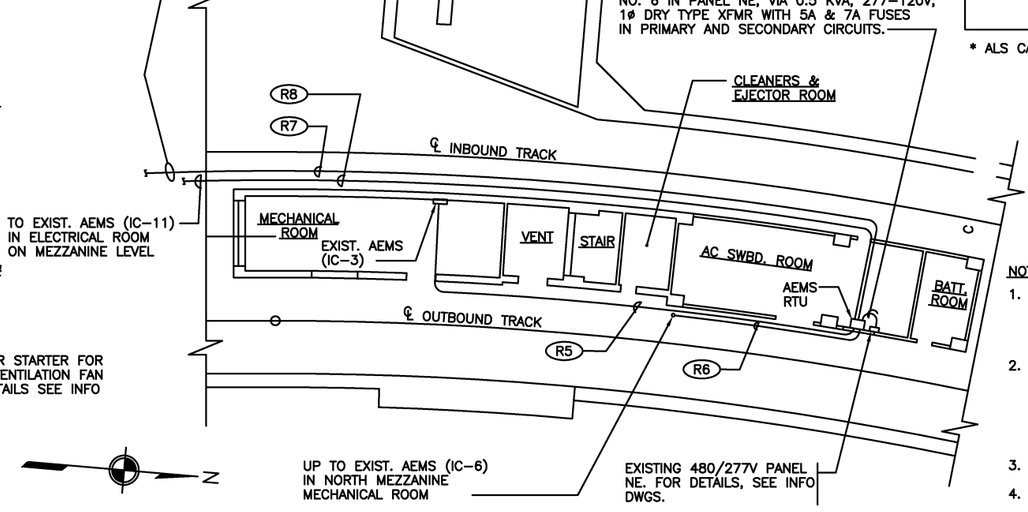

PASSENGER STATION
NORTH SERVICE ROOMS – PLATFORM LEVEL – PARTIAL PLAN

AEMS RTU CONNECTION AND INTERFACE SCHEDULE

AEMS RTU		EXISTING AEMS PANEL		CONDUIT		CABLE QUANTITY & SIZE
LOCATION	CONTRACT DWG. No.	LOCATION	INFORMATION DWG. No.	No.	QUANTITY & SIZE	
SOUTH AC SWBD. RM.	SEE GENERAL NOTE 3	SOUTH PLAT. MECH. ROOM (IC–2)	SEE GENERAL NOTE 3	R2	1–1 1/2" 1–2"	1–9/C#14 6–2/C TW. PR FOR ANALOG POINTS
		SOUTH MEZZ. MECH. ROOM (IC–1)		R3	1–1 1/2"	1–9/C#14
		MECH. ROOM SEE NOTE 4		R4	1–1"	1–4/C#14
NORTH AC SWBD. RM.		NORTH PLAT. MECH. ROOM (IC–3)		R5	1–1 1/2" 1–2"	1–19/C#14 6–2/C TW. PR FOR ANALOG POINTS
		NORTH MEZZ. MECH. ROOM (IC–6)		R6	1–1 1/2" 1–2"	1–19/C#14 1–12/C#14 6–2/C TW. PR FOR ANALOG POINTS
		ELECT. ROOM SEE NOTE 4		R7	1–1"	1–4/C#14
		ELECT. ROOM (IC–11)		R8	1–1 1/2"	1–19/C#14
CHILLER ROOM		CHILLER RM. (IC–7)		R9	3–1 1/2" 1–3"	3–19/C#14 13–2/C TW. PR FOR ANALOG POINTS
TPSS UPPER LEVEL SEE NOTE 5		TPSS UPPER LEVEL (IC–10)		R10	1–1"	1–4/C#14
		FAN SHAFT LOWER LEVEL (IC–8)		R11 *	*	1–9/C#14 ALS
		FAN SHAFT UPPER LEVEL (IC–9)		R12 *	*	1–9/C#14 ALS

* ALS CABLE IN LIEU OF CONDUCTORS IN CONDUIT

GENERAL NOTES:

1. NOMINAL VALUES OR VALUES FROM OTHER CONTRACTS USED BY WAY OF EXAMPLE. THE CONTRACTOR SHALL INSERT NAMES, LOCATIONS, VALUES AND DATA BASED ON THE DESIGN AND INSTALLATION FOR THIS PROJECT.
2. THIS DRAWING IS PROVIDED FOR ILLUSTRATION ONLY TO INDICATE TYPE AND APPEARANCE OF INFORMATION REQUIRED BY WMATA.
3. DESIGNER TO PROVIDE APPROPRIATE CONTRACT AND INFORMATION DWG. NO.
4. THIS DRAWING PROVIDED TO SHOW INTERFACING DETAILS WHEN TRACTION POWER EQUIPMENT IS INSTALLED AS A SEPARATE CONTRACT

NOTES:

1. PARTIAL PLANS ON THIS DRAWING ARE PROVIDED TO SHOW LOCATIONS OF NEW AEMS RTU CABINETS EXCEPT AT FAN SHAFT. FOR LOCATIONS OF EXISTING AEMS PANELS, SEE SCHEDULE.
2. CONTRACTOR SHALL INSTALL NEW CONDUITS AND CABLES TO CONNECT EXISTING AEMS PANELS OR MOTOR STARTERS TO NEW AEMS RTU CABINETS. CONTRACTOR SHALL PROVIDE OPENINGS IN WALLS AND FLOORS AS REQUIRED TO ACCOMMODATE INDICATED CONDUIT ROUTING. CONDUITS SHALL BE GALVANIZED RIGID STEEL.
3. EXISTING EQUIPMENT IN ROOMS IS NOT SHOWN.
4. CONTRACTOR SHALL CONNECT CONDUIT AND CABLES TO APPROPRIATE MOTOR STARTERS FOR DV–1 AND DV–2 AS INDICATED ON THE PARTIAL PLANS IN LIEU OF THE EXISTING AEMS PANELS IC–4 AND IC–5 IN THE SOUTH AND NORTH DOME VENTILATION FAN ROOMS.
5. FOR CONNECTION OF TD SERIES CABLES FROM TPSS AC AND DC SWITCHGEARS TO AEMS RTU, SEE TPSS DWGS.

DESIGNED	J KROLIK	2–01 DATE
DRAWN	L POWELL	2–01 DATE
CHECKED	PK ROY	2–01 DATE
APPROVED	R GANERIWAL	2–01 DATE

REFERENCE DRAWINGS

NUMBER	DESCRIPTION

REVISIONS

DATE	BY	DESCRIPTION
08/2001	SYSP	Revised and issued by the Authority

WASHINGTON METROPOLITAN AREA TRANSIT AUTHORITY

DEPARTMENT OF TRANSIT SYSTEM DEVELOPMENT
OFFICE OF SYSTEMS

SUBMITTED _____ DATE

APPROVED _____ DIRECTOR May 3, 2001 DATE

TRACTION POWER SITE SPECIFIC DWG
AEMS RTU DETAILS

SCALE 1/16"=1'–0"

DRAWING NO. ST–TP–SSI–032

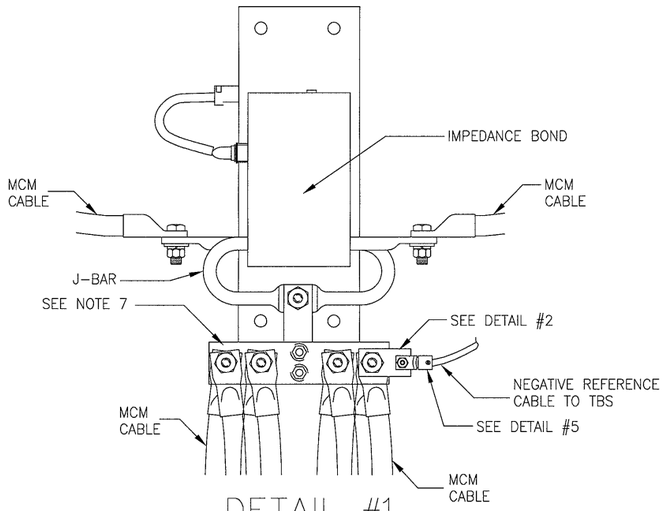

DETAIL #1
J-BAR WITH " T " CONNECTOR

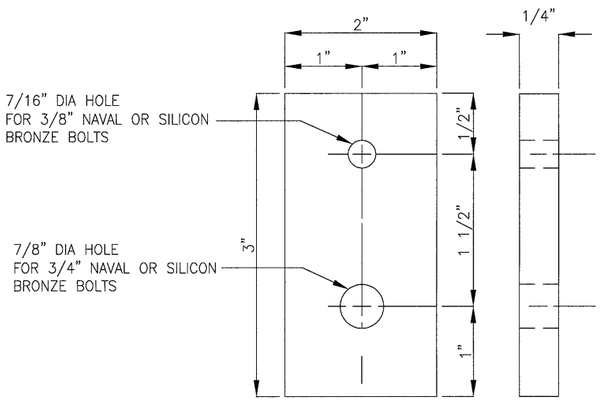

DETAIL #2
NEGATIVE REFERENCE COPPER PLATE

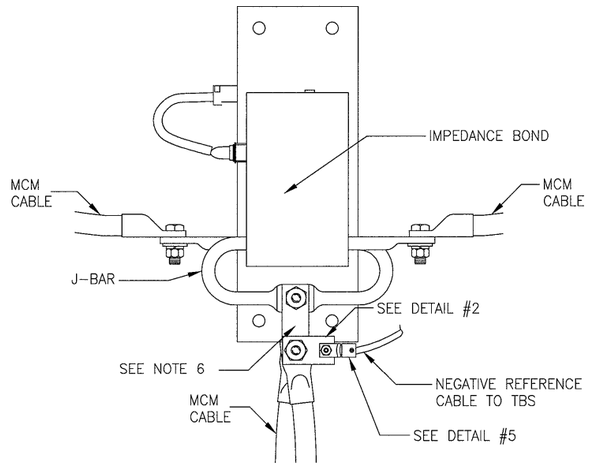

DETAIL #3
J-BAR WITH 2 MCM RETURN CABLES

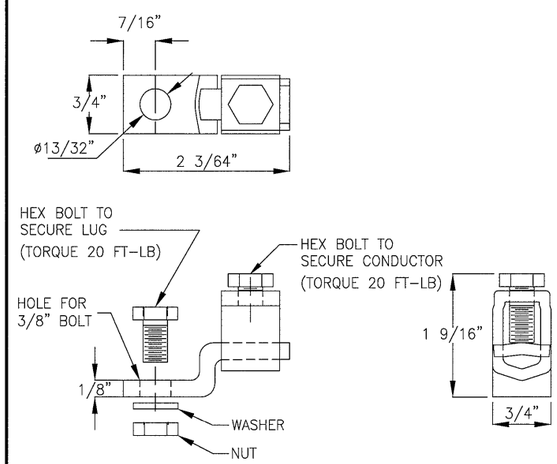

DETAIL #5
COPPER TERMINAL LUG

"Professional Certification. I certify that these documents were prepared or approved by me, and that I am a duly licensed professional engineer under the laws of the State of Maryland, License No. 32300, Expiration Date: October 16, 2011."

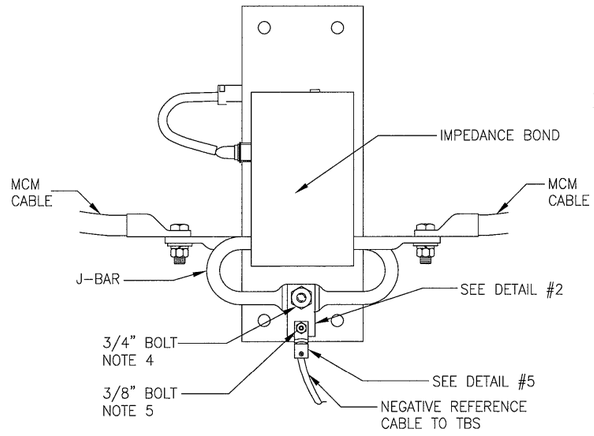

DETAIL #4
J-BAR WITHOUT MCM RETURN CABLES

GENERAL NOTES:

1. FABRICATE OR PURCHASE A COPPER PLATE, 3"L X 2"W X 1/4"D. SEE DETAIL #2 FOR DIMENSIONS.
2. PROCURE A COPPER TERMINAL LUG WITH 150°C NORMAL SERVICE TEMPERATURE SUITABLE FOR MIN.#6 AWG TO MAX.#3/0 AWG NEGATIVE REFERENCE CABLES, USE SIMILAR COPPER TERMINAL LUG AS IN DETAIL #5 BY THOMAS & BETTS #BTC3104.
3. CONNECT AT EXISTING ATC/J-BAR HOLES TO CONNECT THE 3"X2"X1/4" PLATE. RETAIN EXISTING FLAT SILICON BRONZE WASHERS ON J-BARS.
4. PROVIDE HEAVY DUTY NAVAL OR SILICON BRONZE HEX BOLT WITH 3/4"DIA. X 3 1/4"L FOR J-BARS (TORQUE 70 FT-LB).
5. PROVIDE HEAVY DUTY NAVAL OR SILICON BRONZE HEX BOLT NUTS WITH 3/8"DIA. X 1 1/2"L FOR CONNECTION TO A COPPER TERMINAL LUG (TORQUE 20 FT-LB).
6. ATC COPPER EXTENSION PLATE WITH 98% CONDUCTIVITY; 6"L X 3"W X 3/4"D THICK.
7. ATC COPPER T-PLATE WITH 98% CONDUCTIVITY; SEE DWG. ST-TC-G-036 FOR DETAILS.
8. DISSIMILAR MATERIAL/COMPONENTS/PARTS SHALL NOT BE USED ON PLATES/LUGS.
9. COMPONENTS MUST COMPLY WITH CODES AND REGULATIONS OF THE LOCAL JURISDICTIONAL AUTHORITIES AND NATIONAL ELECTRICAL CODE (NEC).

This Drawing Reflects a WMATA standard design approach. Project specific drawings must be developed by the Contractor which reflect this Design Philosophy

DESIGNED	B.G.	08-09 DATE
DRAWN	V.T.	08-09 DATE
CHECKED	B.G.	08-09 DATE
APPROVED	A.R.	08-09 DATE

REFERENCE DRAWINGS	
NUMBER	DESCRIPTION

REVISIONS		
DATE	BY	DESCRIPTION

STATE OF MARYLAND · ASHTON W. ROBINSON · 32300 · PROFESSIONAL ENGINEER

WASHINGTON METROPOLITAN AREA TRANSIT AUTHORITY

OFFICE OF ENGINEERING SUPPORT SERVICES

SUBMITTED Ashton W. Robinson 9/9/09 DATE

APPROVED DIRECTOR 9/10/09 DATE

TYPICAL NEGATIVE REFERENCE CABLE CONNECTION TO IMPEDANCE BOND

SCALE NONE

DRAWING NO. ST-TP-SSI-033

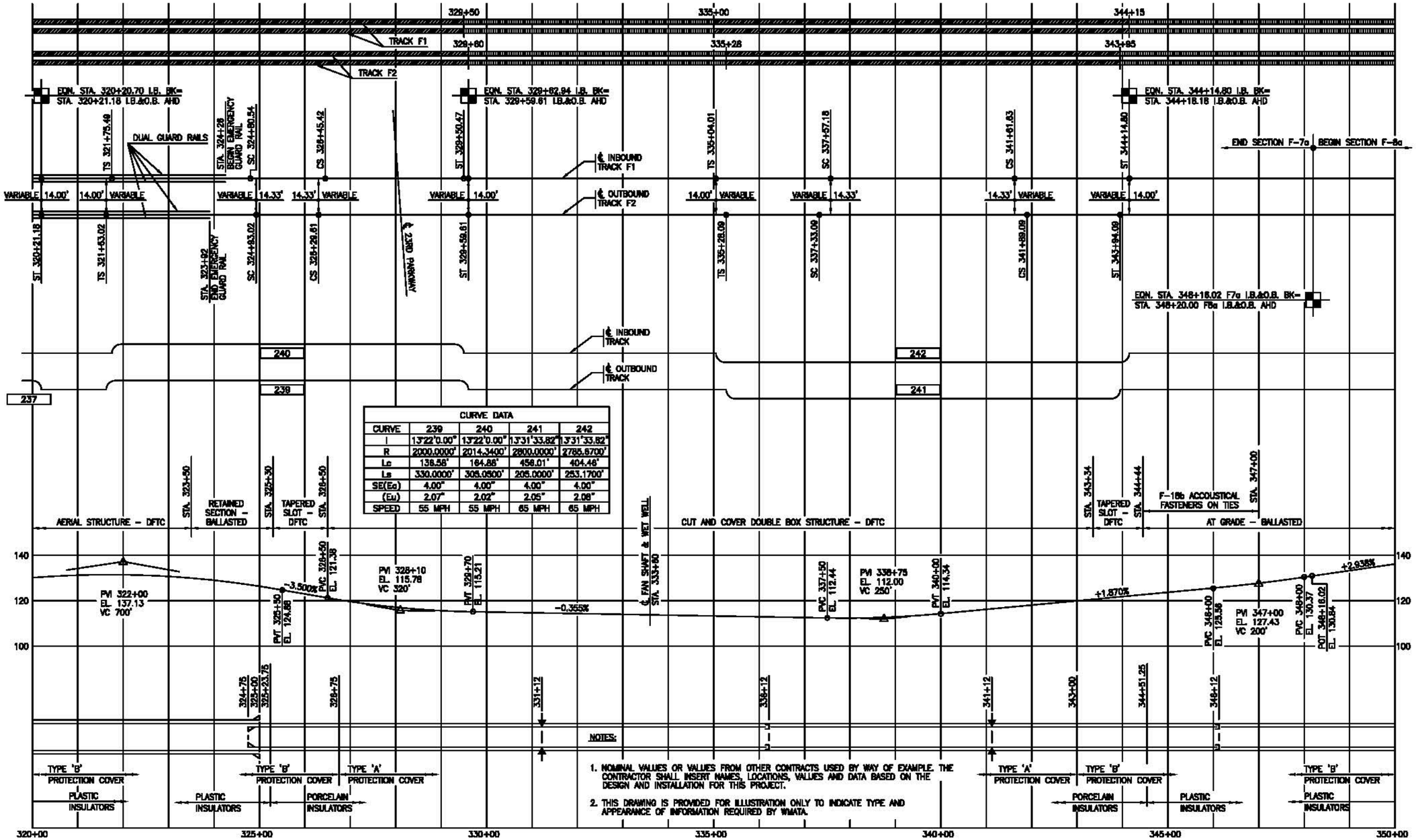

NOTES:

1. NOMINAL VALUES OR VALUES FROM OTHER CONTRACTS USED BY WAY OF EXAMPLE. THE CONTRACTOR SHALL INSERT NAMES, LOCATIONS, VALUES AND DATA BASED ON THE DESIGN AND INSTALLATION FOR THIS PROJECT.
2. THIS DRAWING IS PROVIDED FOR ILLUSTRATION ONLY TO INDICATE TYPE AND APPEARANCE OF INFORMATION REQUIRED BY WMATA.

DESIGNED	R ROBERTS	3/08 DATE
DRAWN	A. DAVIS	5-08 DATE
CHECKED	L.R. PRIDGETT	5-08 DATE
APPROVED	C. MYERS	5-08 DATE

REFERENCE DRAWINGS

NUMBER	DESCRIPTION

REVISIONS

DATE	BY	DESCRIPTION
06/2008	CENF	REVISED TITLE
12/2008	CENF	MINOR REVISIONS

WASHINGTON METROPOLITAN AREA TRANSIT AUTHORITY

OFFICE OF ENGINEERING SUPPORT SERVICES

SUBMITTED L.R. Pridgett 10/2007 DATE

APPROVED 10/2007 DATE

TRACKWORK STANDARD DRAWING

SITE SPECIFIC DRAWING

TRACK CHART – SHEET 1 OF 2

SCALE: NONE

DRAWING NO.: ST-TW-001

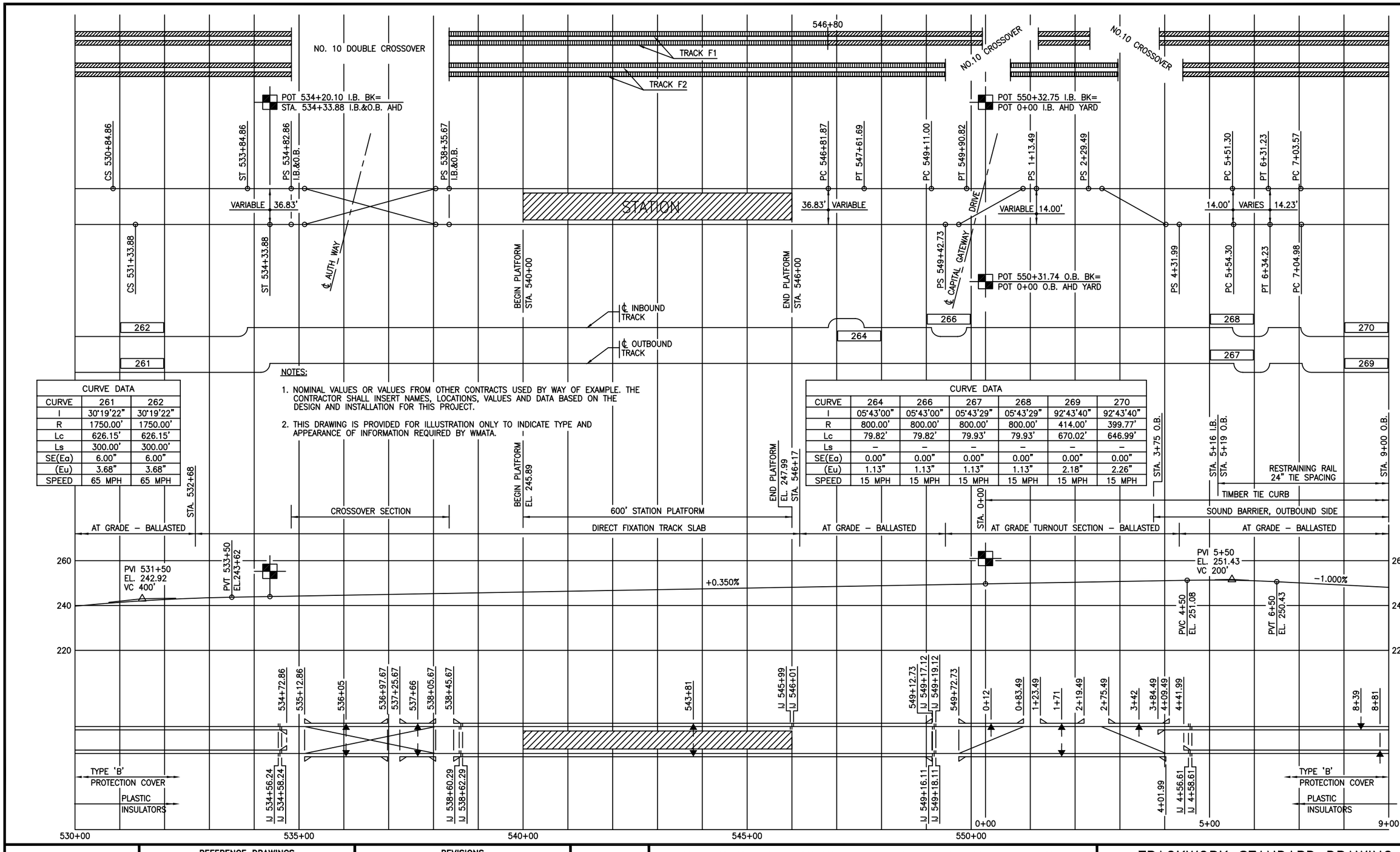

CURVE DATA		
CURVE	261	262
I	30°19'22"	30°19'22"
R	1750.00'	1750.00'
Lc	626.15'	626.15'
Ls	300.00'	300.00'
SE(Eq)	6.00"	6.00"
(Eu)	3.68"	3.68"
SPEED	65 MPH	65 MPH

CURVE DATA						
CURVE	264	266	267	268	269	270
I	05°43'00"	05°43'00"	05°43'29"	05°43'29"	92°43'40"	92°43'40"
R	800.00'	800.00'	800.00'	800.00'	414.00'	399.77'
Lc	79.82'	79.82'	79.93'	79.93'	670.02'	646.99'
Ls	–	–	–	–	–	–
SE(Eq)	0.00"	0.00"	0.00"	0.00"	0.00"	0.00"
(Eu)	1.13"	1.13"	1.13"	1.13"	2.18"	2.26"
SPEED	15 MPH	15 MPH	15 MPH	15 MPH	15 MPH	15 MPH

NOTES:

1. NOMINAL VALUES OR VALUES FROM OTHER CONTRACTS USED BY WAY OF EXAMPLE. THE CONTRACTOR SHALL INSERT NAMES, LOCATIONS, VALUES AND DATA BASED ON THE DESIGN AND INSTALLATION FOR THIS PROJECT.
2. THIS DRAWING IS PROVIDED FOR ILLUSTRATION ONLY TO INDICATE TYPE AND APPEARANCE OF INFORMATION REQUIRED BY WMATA.

DESIGNED R ROBERTS 3/05 DATE
DRAWN A. DAVIS 5-06 DATE
CHECKED L.R. PADGETT 5-06 DATE
APPROVED C. MYERS 6-06 DATE

REFERENCE DRAWINGS	
NUMBER	DESCRIPTION

REVISIONS		
DATE	BY	DESCRIPTION
05/2006	CENF	MINOR REVISION
12/2006	CENF	MINOR REVISION

WASHINGTON METROPOLITAN AREA TRANSIT AUTHORITY

OFFICE OF ENGINEERING SUPPORT SERVICES

SUBMITTED LRPadgett 10/2007 DATE

APPROVED 10/2007 DATE

TRACKWORK STANDARD DRAWING
SITE SPECIFIC DRAWING
TRACK CHART – SHEET 2 OF 2

SCALE NONE

DRAWING NO. ST-TW-002

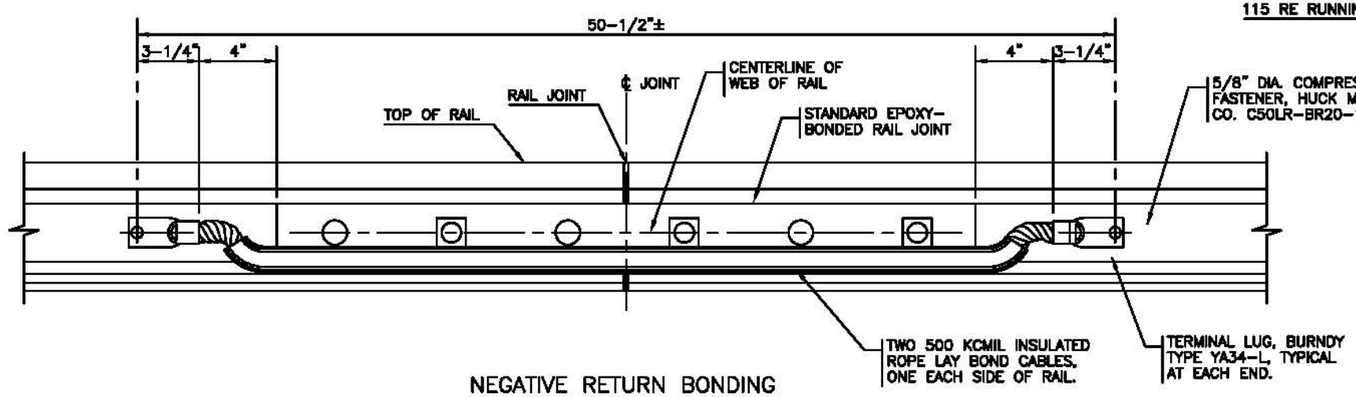

NEGATIVE RETURN BONDING

NOTE:
THE DIRECT FIXATION FASTENER SHALL BE INSTALLED IN SUCH A MANNER THAT THE RAIL CLAMP DOES NOT MAKE DIRECT CONTACT WITH ANY PART OF THE BONDED INSULATED JOINT ASSEMBLY.

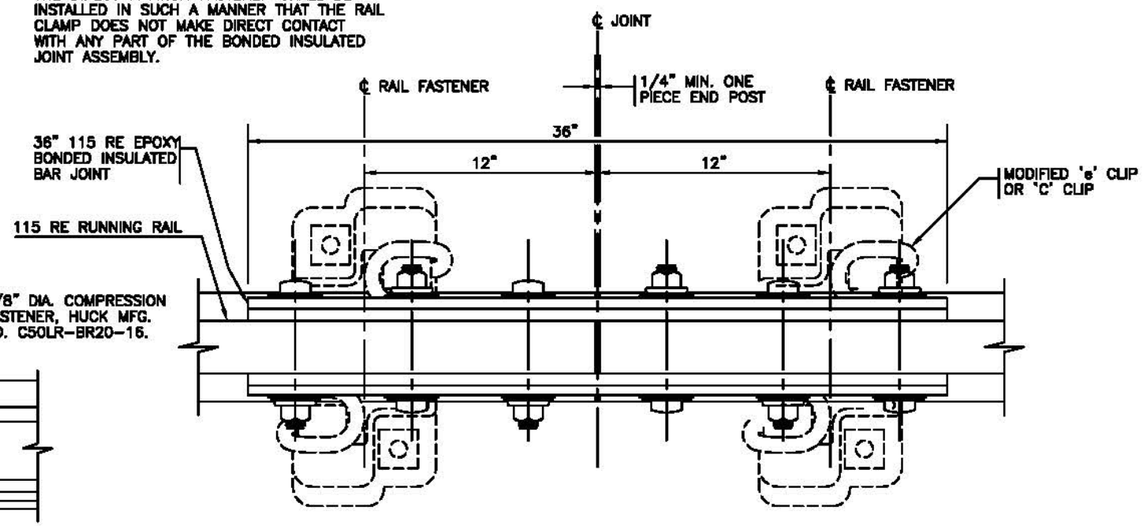

DETAIL OF FASTENER LOCATION, INSULATED JOINT

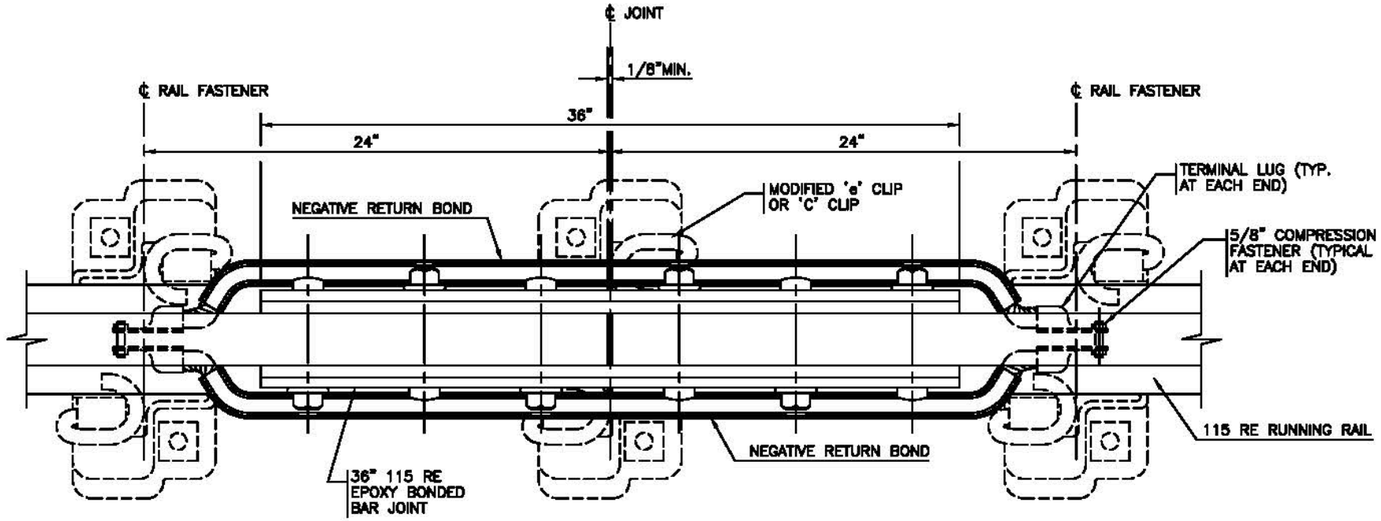

DETAIL OF NEGATIVE RETURN BONDS, FASTENER LOCATION, STANDARD JOINT

REINFORCING NOTES:

A. LONGITUDINAL WIRES TO BE CUT 1" INSIDE ENDS OF GROUT PAD.

B. TRANSVERSE WIRES TO BE CUT FLUSH WITH OUTSIDE LONGITUDINAL WIRE.

C. ONE TRANSVERSE WIRE IS TO BE LOCATED OVER THE TRANSVERSE CENTERLINE OF THE FASTENER TO MINIMIZE INTERFERENCE WITH ANCHOR BOLT HOLES.

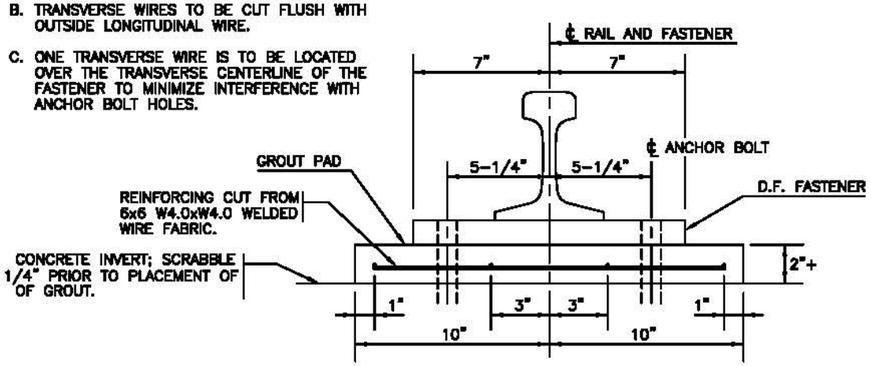

GROUT PAD REINFORCING

DESIGNED	S. HICKS	1/05 DATE
DRAWN	A. DAVIS	5-05 DATE
CHECKED	L.R. PADGETT	5-05 DATE
APPROVED	C. MYERS	5-05 DATE

REFERENCE DRAWINGS	
NUMBER	DESCRIPTION

REVISIONS		
DATE	BY	DESCRIPTION
05/2008	CEMF	MINOR REVISION
12/2006	CEMF	MINOR REVISION

WASHINGTON METROPOLITAN AREA TRANSIT AUTHORITY

OFFICE OF ENGINEERING SUPPORT SERVICES

SUBMITTED L.R. Padgett 10/2007 DATE

APPROVED 10/2007 DATE

TRACKWORK STANDARDS DRAWING

MISCELLANEOUS RAIL JOINT AND GROUT PAD REINFORCING DETAILS

SCALE 3"=1'-0" (0, 3", 6")

DRAWING NO. ST-TW-003

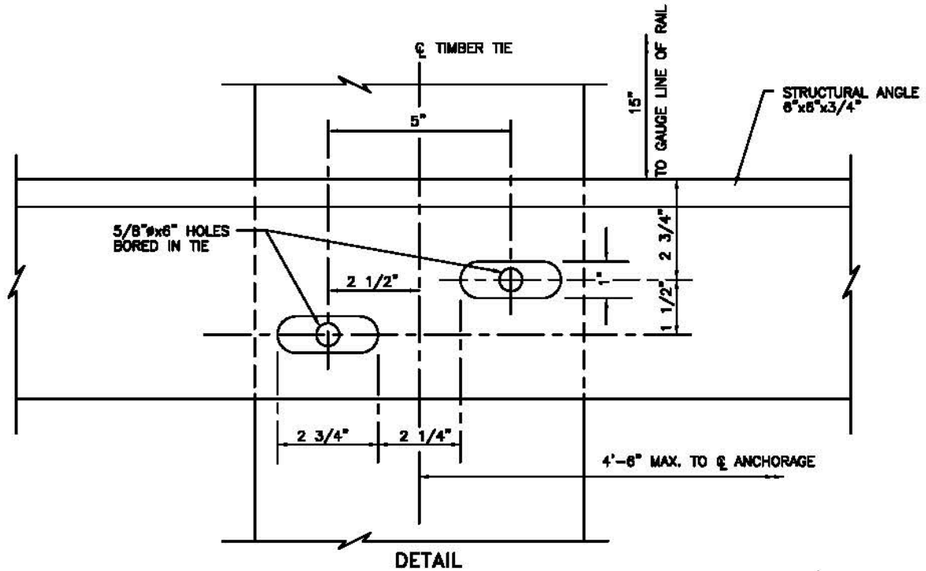

DETAIL
BALLASTED TRACK–TIMBER TIES
SCALE: 1"=2"

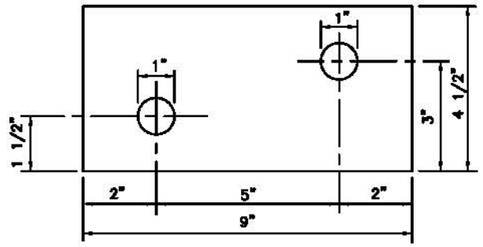

BALLASTED
COVER PLATE
4 1/2"x1/2"x9"
SCALE: 1"=2"

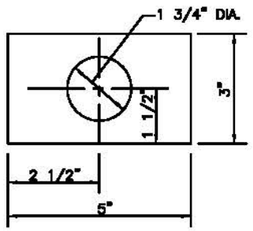

DIRECT FIXATION
COVER PLATE
3"x1/2"x5"
SCALE: 1"=2"

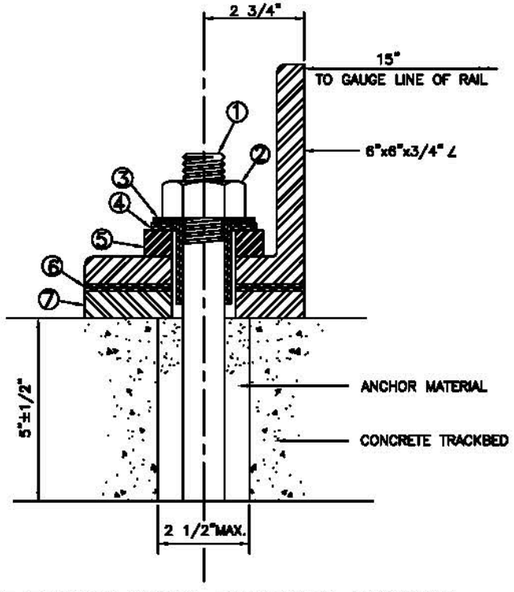

DIRECT FIXATION TRACK–ANCHORAGE ASSEMBLY
SCALE: 1"=2"

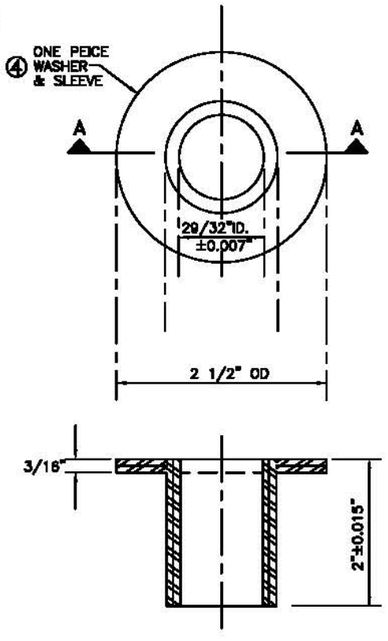

SECTION A–A – ONE PIECE
FIBER WASHER & SLEEVE ASSEMBLY ④
SCALE: FULL SIZE

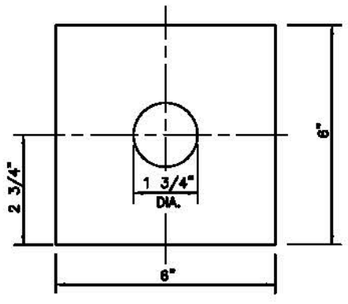

FIBER INSULATING PAD ⑦
6"x6"x3/16"

BASE PLATE ⑧
6"x6"x3/4"
SCALE: 1"=2"

BALLASTED TRACK–TIMBER TIE ANCHORAGE–EACH

QTY	BILL OF MATERIAL DESCRIPTION
2	7/8" ø SCREW SPIKE
1	COVER PLATE, 4 1/2"x 1/2"x 9", ASTM–A36

DIRECT FIXATION TRACK–ANCHORAGE–EACH

ITEM NO.	QTY	BILL OF MATERIAL DESCRIPTION
1	1	ANCHOR BOLT 1 1/8" ø x 9 1/2" ASTM–A449
2	1	NUT FOR 1 1/8" ø BOLT ASTM–A325
3	1	WASHER 1 1/4" ID x 2 3/4" OD x 5/32" THICK ASTM–A325
4	1	ONE PIECE–INSULATING FIBER WASHER(29/32" ID, 2 1/2" OD) AND INSULATING FIBER SLEEVE (29/32" ID, 1 9/32" OD)
5	1	COVER PLATE 3" x 5" x 1/2" ASTM–A36
6	1	FIBER INSULATING PAD 6" x 6" x 3/16"
7	1	BASE PLATE 6" x 6" x 3/4" ASTM–A36

DESIGNED DCCD 9/93
DRAWN A. DAVIS 5-08
CHECKED L.R. PADGETT 5-08
APPROVED C. MYERS 5-08

REFERENCE DRAWINGS

NUMBER	DESCRIPTION

REVISIONS

DATE	BY	DESCRIPTION
05/2006	CDNF	DETAIL TITLE REVISION
11/2006	CDNF	REVISED SLEEVE ASSEMBLY TO ONE PIECE PER TBSM

WASHINGTON METROPOLITAN AREA TRANSIT AUTHORITY
OFFICE OF ENGINEERING SUPPORT SERVICES

SUBMITTED L.R. Padgett 10/2007 DATE
APPROVED 10/2007 DATE

TRACKWORK STANDARD DRAWING
EMERGENCY GUARD RAIL DETAILS

SCALE AS NOTED
DRAWING NO. ST–TW–005

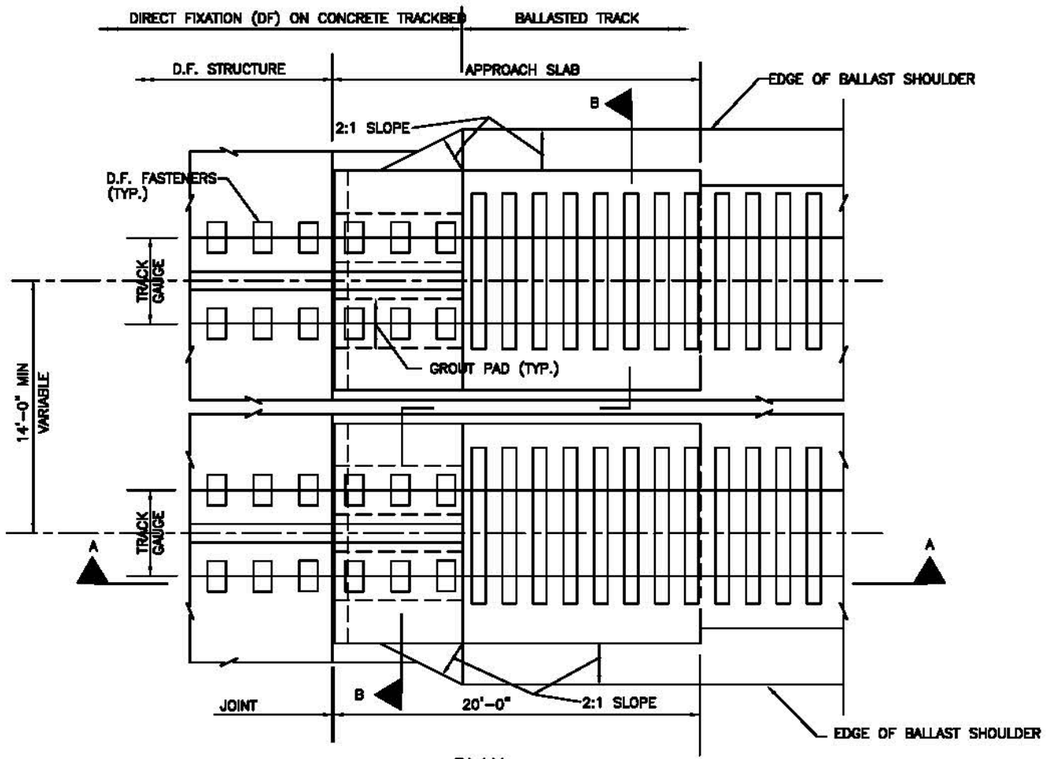

PLAN
SCALE: 1/4"=1'-0"

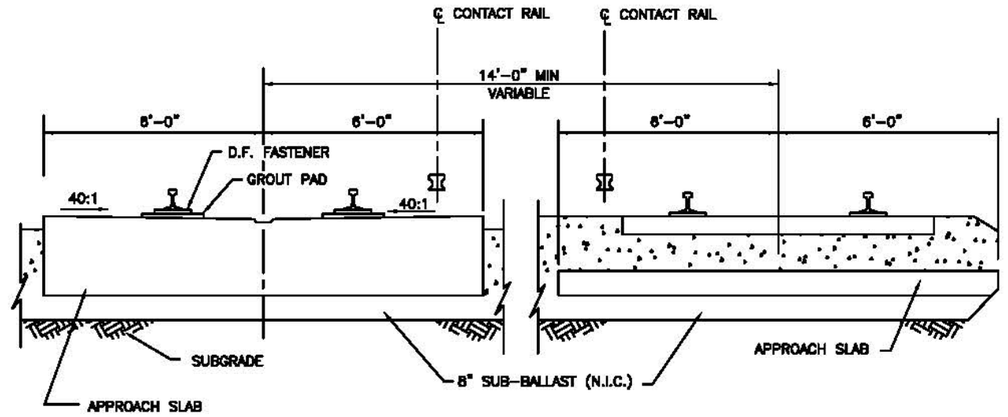

SECTION B-B
SCALE: 1/2"=1'-0"

NOTES:

1. APPROACH SLABS ARE CONSTRUCTED ON THE INBOUND AND OUTBOUND TRACK AT ALL TRANSITIONS FROM DIRECT FIXATION TO BALLASTED TRACK.
2. ADJUST TRACK FASTENER POSITIONS TO FIT BACKWALL SKEW AND APPROACH SLAB LENGTH VARIATIONS.

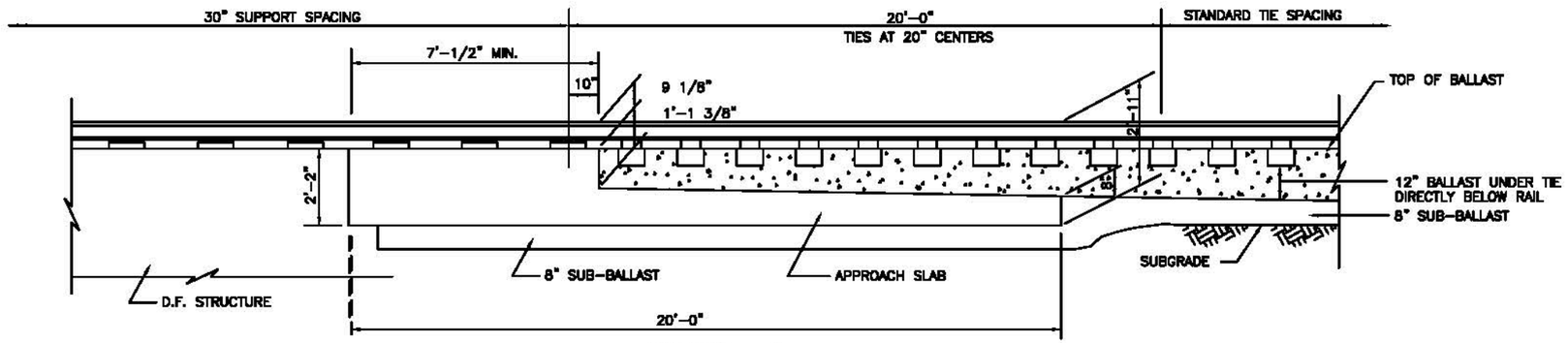

SECTION A-A
SCALE: 1/2"=1'-0"

DESIGNED	RDD	6/07 DATE
DRAWN	A. DAVIS	5-08 DATE
CHECKED	L.R. PADGETT	5-08 DATE
APPROVED	C. MYERS	5-08 DATE

REFERENCE DRAWINGS

NUMBER	DESCRIPTION

REVISIONS

DATE	BY	DESCRIPTION
05/2008	CENF	DESIGN. TITLE REVISION

WASHINGTON METROPOLITAN AREA TRANSIT AUTHORITY

OFFICE OF ENGINEERING SUPPORT SERVICES

SUBMITTED L.R. Padgett 10/2007 DATE

APPROVED 10/2007 DATE

TRACKWORK STANDARD DRAWING
APPROACH SLAB
DIRECT FIXATION/BALLASTED TRACK

SCALE: AS NOTED

DRAWING NO.: ST-TW-006

NOTE:
1. CUT AS NECESSARY TO CLEAR JOINT BAR AND BOLTS.

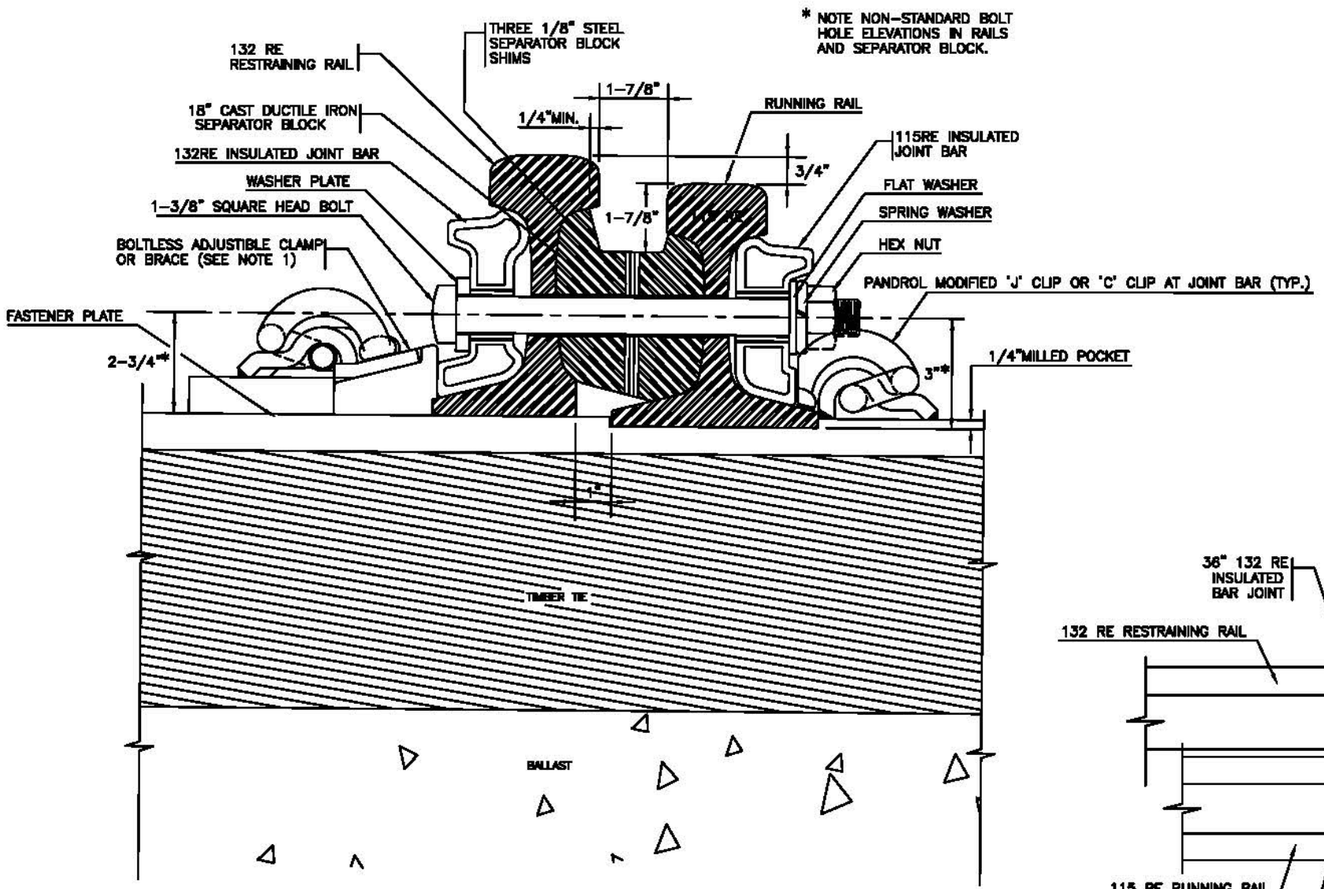

SECTION, DOUBLE RAIL INSULATED JOINT
SCALE: 1/2"=1"

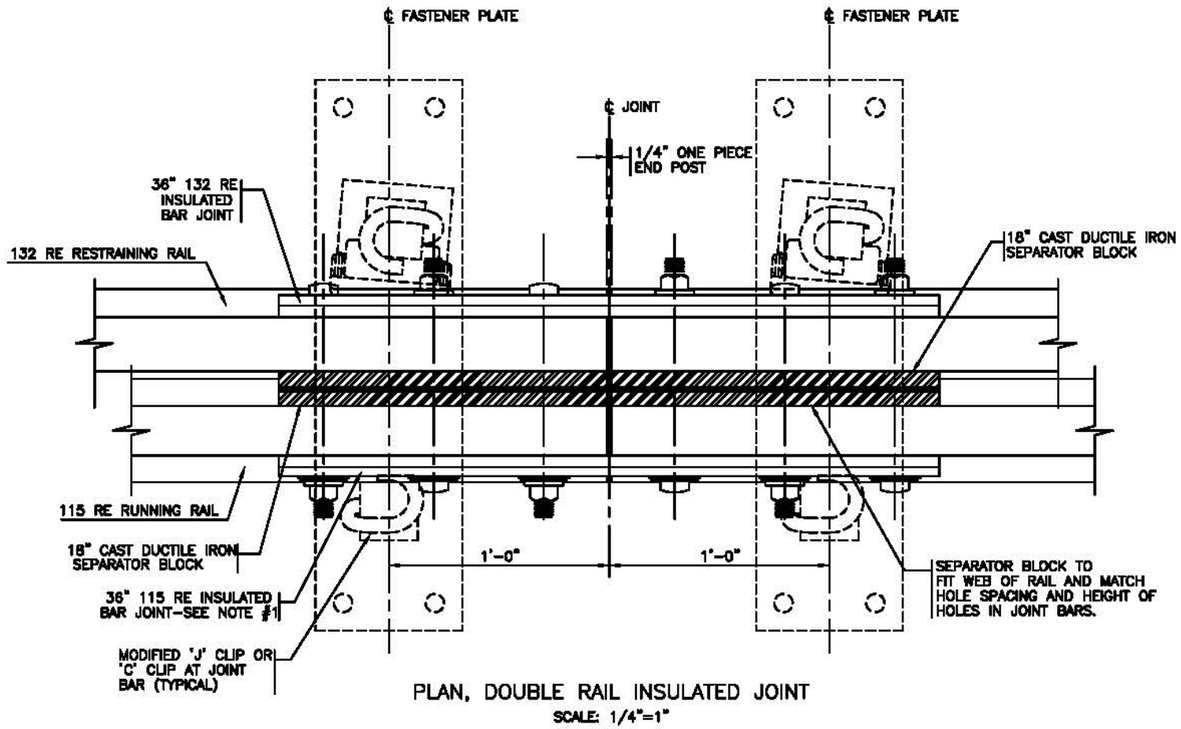

PLAN, DOUBLE RAIL INSULATED JOINT
SCALE: 1/4"=1"

NOTE:
FIT WEB OF RAIL AND MATCH HOLE SPACING AND HEIGHT OF HOLES IN 132RE JOINT BAR.

DESIGNED	R.HICKS	9/08 DATE
DRAWN	A.DAVIS	11/08 DATE
CHECKED	L.PADGETT	11/08 DATE
APPROVED	C.MYERS	11/08 DATE

REFERENCE DRAWINGS

NUMBER	DESCRIPTION

REVISIONS

DATE	BY	DESCRIPTION
11/2008	CSNF	REVISED END POST MODIFICATION, ADDED NOTE

WASHINGTON METROPOLITAN AREA TRANSIT AUTHORITY

OFFICE OF ENGINEERING SUPPORT SERVICES

SUBMITTED L.R.Padgett 10/2007 DATE

APPROVED 10/2007 DATE

TRACKWORK STANDARD DRAWING
RESTRAINING RAIL/RUNNING RAIL INSULATED JOINT DETAILS, BALLASTED TRACK

SCALE: AS SHOWN

DRAWING NO. ST-TW-RR-001

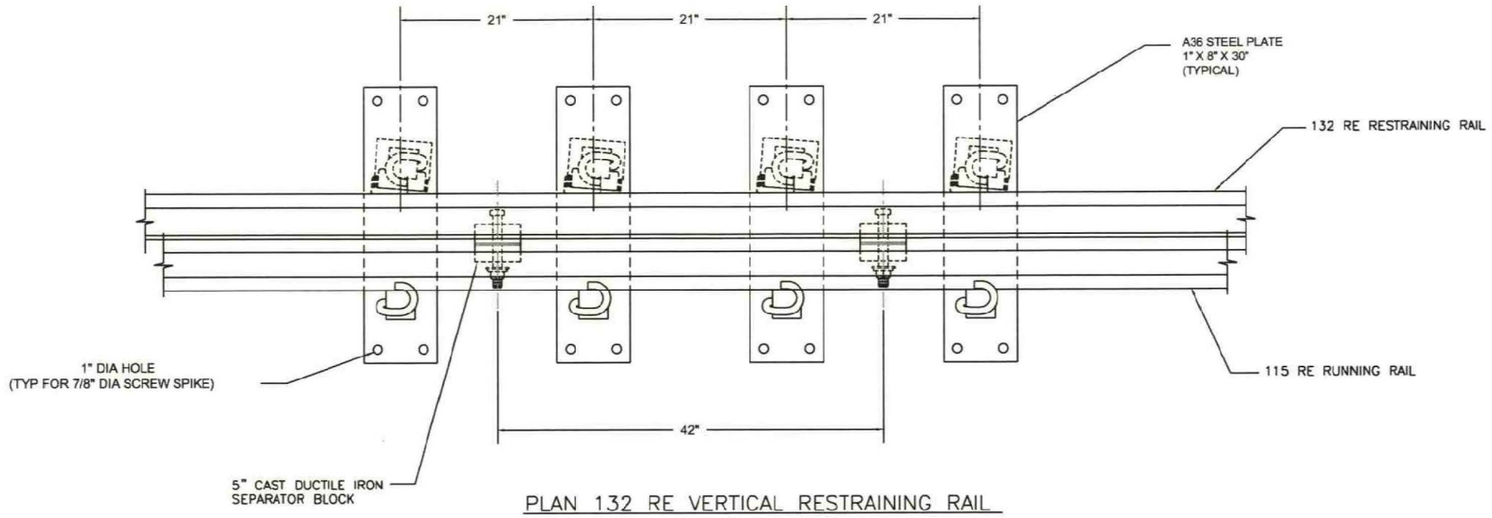

PLAN 132 RE VERTICAL RESTRAINING RAIL

SCALE: 1/8"=1"

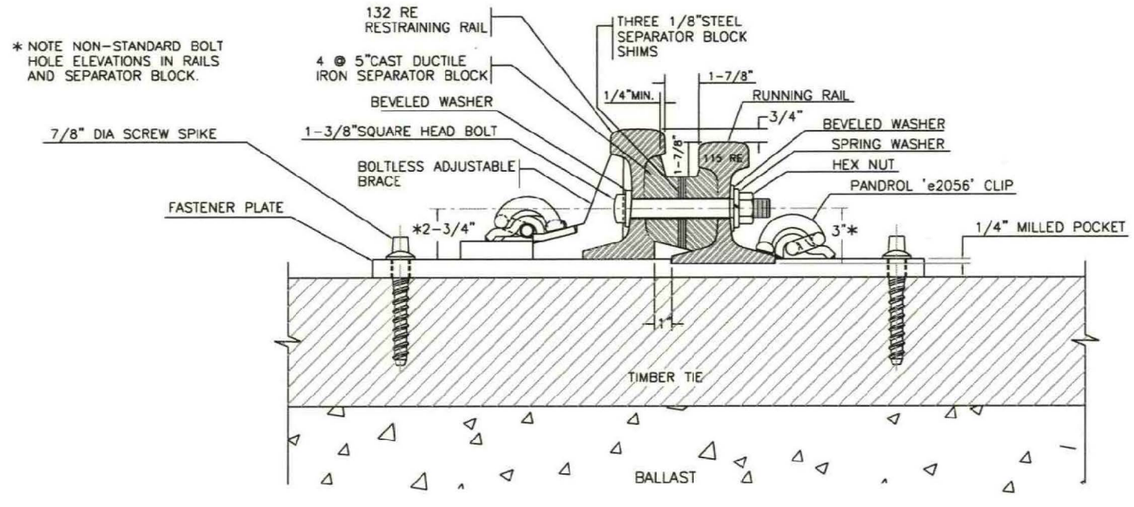

SECTION THRU CENTERLINE OF SEPARATOR BLOCK
FOR 132 RE RESTRAINING RAIL

SCALE: 1/4"=1"

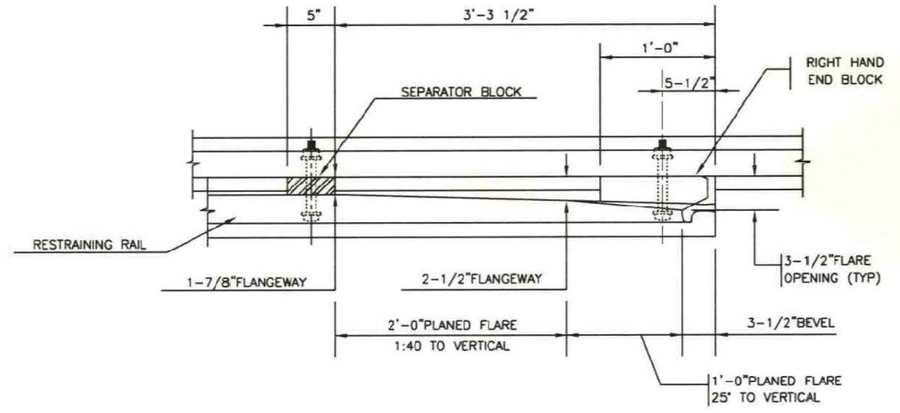

SCALE: NONE

DESIGNED	R.REYES	11/06 DATE
DRAWN	A.DAVIS	11/06 DATE
CHECKED	L.PADGETT	11/06 DATE
APPROVED	C.MYERS	11/06 DATE

REFERENCE DRAWINGS	
NUMBER	DESCRIPTION

REVISIONS		
DATE	BY	DESCRIPTION
11/2006	CENF	ADDED DWG TO WMATA STD-TW SET

WASHINGTON METROPOLITAN AREA TRANSIT AUTHORITY

OFFICE OF ENGINEERING SUPPORT SERVICES

SUBMITTED L.R.Padgett 10/2007 DATE

APPROVED 10/2007 DATE

TRACKWORK STANDARD DRAWING
VERTICAL RESTAINING RAIL DETAILS
BALLASTED TRACK

SCALE: AS SHOWN

DRAWING NO.: ST-TW-RR-002

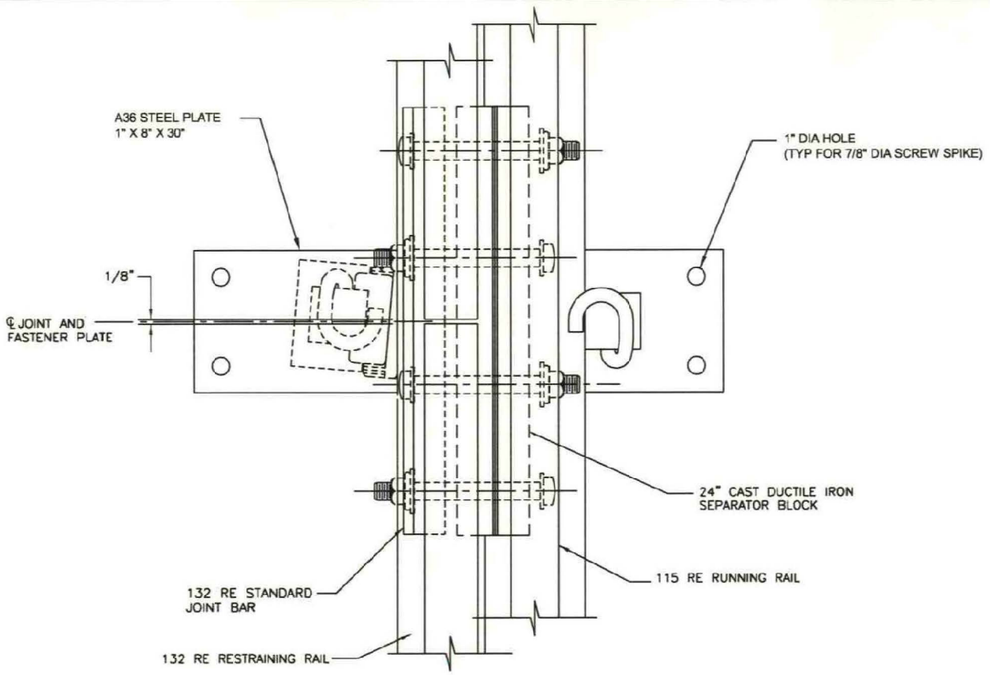

PLAN VIEW
SCALE: 1/4"=1"

* NOTE NON-STANDARD BOLT HOLE ELEVATIONS IN RAILS AND SEPARATOR BLOCK.

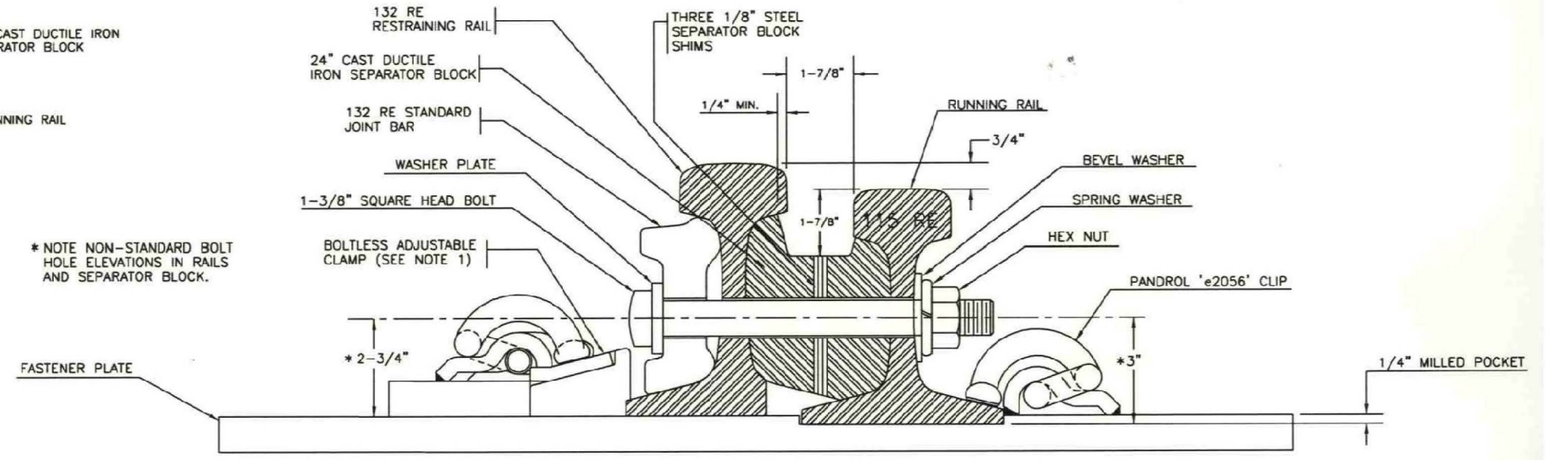

SECTION FOR 132 RE RESTRAINING RAIL STANDARD JOINT
SCALE: 1/2"=1"

NOTES:

1. CUT AS NECESSARY TO CLEAR JOINT BAR AND BOLTS.

DESIGNED	R.REYES	11/06 DATE
DRAWN	A.DAVIS	11/06 DATE
CHECKED	L.PADGETT	11/06 DATE
APPROVED	C.MYERS	11/06 DATE

REFERENCE DRAWINGS	
NUMBER	DESCRIPTION

REVISIONS		
DATE	BY	DESCRIPTION
11/2006	CENF	ADDED DWG TO WMATA STD-TW SET

WASHINGTON METROPOLITAN AREA TRANSIT AUTHORITY

OFFICE OF ENGINEERING SUPPORT SERVICES

SUBMITTED LRPadgett 10/2007 DATE

APPROVED 10/2007 DATE

TRACKWORK STANDARD DRAWING
VERTICAL RESTAINING RAIL DETAILS STANDARD JOINT

SCALE: AS SHOWN

DRAWING NO.: ST-TW-RR-003

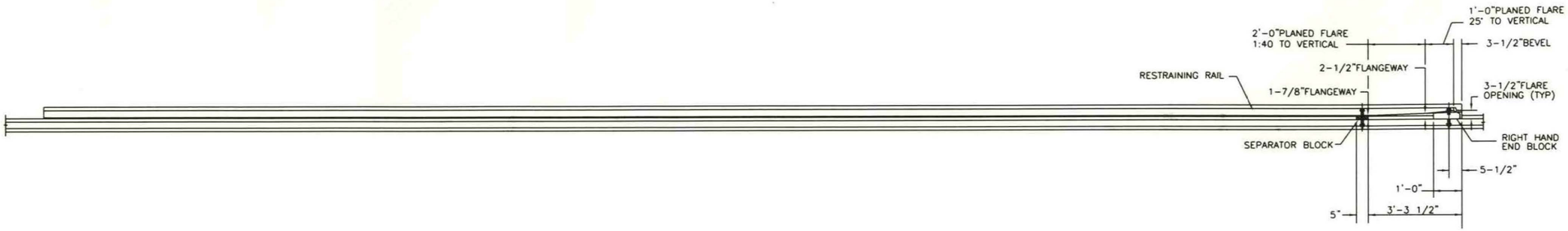

END TAPER, TYPE 1

SEPARATOR BLOCKS @ EVERY 42" ON CENTER

SCALE: 1/2" = 1'-0"

END TAPER, TYPE 2

SEPARATOR BLOCKS @ EVERY 42" ON CENTER

SCALE: 1/2" = 1'-0"

NOTES:

1. SEPARATOR BLOCKS AND BOLTS NOT SHOWN.
2. RESTRAINING RAIL END TAPER WILL BE DRILLED FOR END BLOCKS.
3. RESTRAINING RAIL SHALL BE DRILLED FOR SEPARATOR BLOCKS IN THE FIELD.

DESIGNED	R.REYES	11/06 DATE
DRAWN	A.DAVIS	11/06 DATE
CHECKED	L.PADGETT	11/06 DATE
APPROVED	C.MYERS	11/06 DATE

REFERENCE DRAWINGS	
NUMBER	DESCRIPTION

REVISIONS		
DATE	BY	DESCRIPTION
11/2006	CENF	ADDED DWG TO WMATA STD-TW SET

WASHINGTON METROPOLITAN AREA TRANSIT AUTHORITY

OFFICE OF ENGINEERING SUPPORT SERVICES

SUBMITTED L.R.Padgett 10/2007 DATE

APPROVED 10/2007 DATE

TRACKWORK STANDARD DRAWING
38'-6" RESTAINING RAIL END SECTION

SCALE: AS SHOWN

DRAWING NO.: ST-TW-RR-004

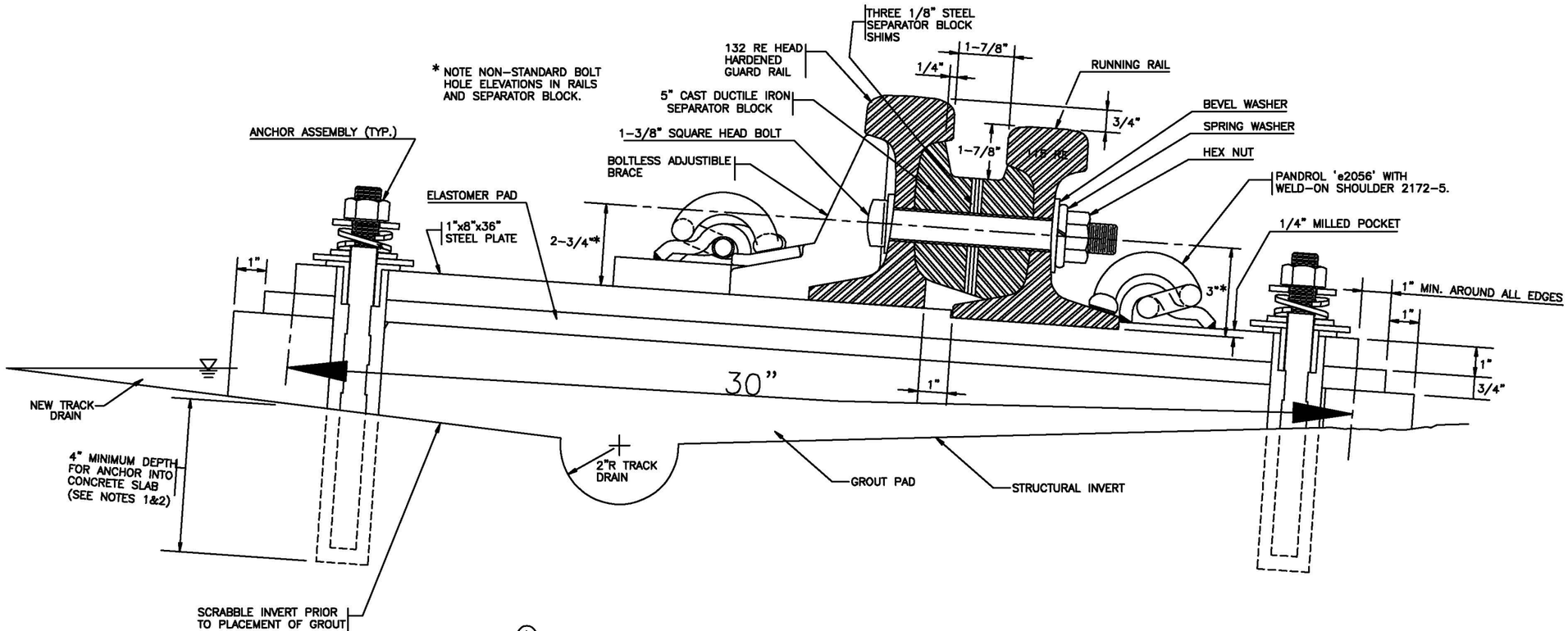

SECTION THRU CENTERLINE OF SEPARATOR BLOCK
FOR 132 RE RESTRAINING RAIL STANDARD JOINT
SCALE: 1/2"=1"

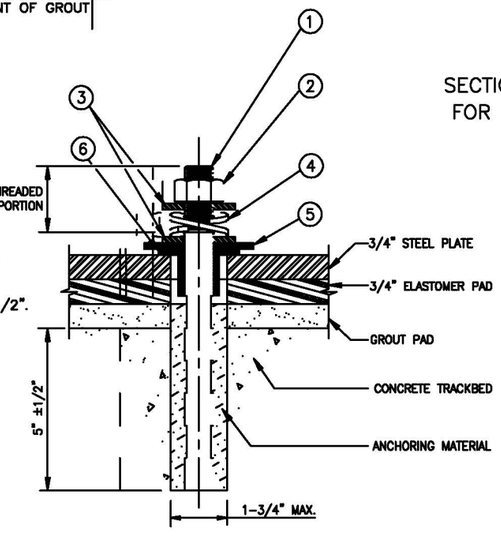

NOTES:
1. X-RAY INVERTPRIOR TO CORE DRILLING FOR ANCHOR ASSEMBLY TO PREVENT DAMAMGE/ CONTACT WITH STRUCTURAL REINFORCEMENT.
2. MAXIMUM DRILLING DEPTH TO BE 5" +/- 1/2".

SPECIAL PLATE ANCHOR ASSEMBLY
NOT TO SCALE

BILL OF MATERIAL - ANCHOR ASSEMBLY		
ITEM	QTY.	DESCRIPTION - FURNISHED BY OTHERS
1	1	STEEL STUD 7/8"x10" ASTM-A449
2	1	STEEL HEX NUT FOR 7/8"ø BOLT, WASHER FACED, ASTM-A-325
3	2	STEEL WASHER, 15/16" I.D., 2-1/4" O.D., 3/16" THICK, ASTM-A-325
4	1	DOUBLE COIL SPRING WASHER
5	1	INSULATING FIBER WASHER, 1-9/32" I.D., 3-3/8" O.D.
6	1	ONE PIECE - INSULATING FIBER WASHER (29/32" I .D., 2-1/2" O.D.) AND INSULATING FIBER SLEEVE (29/32" I.D., 1-9/32" O.D.)

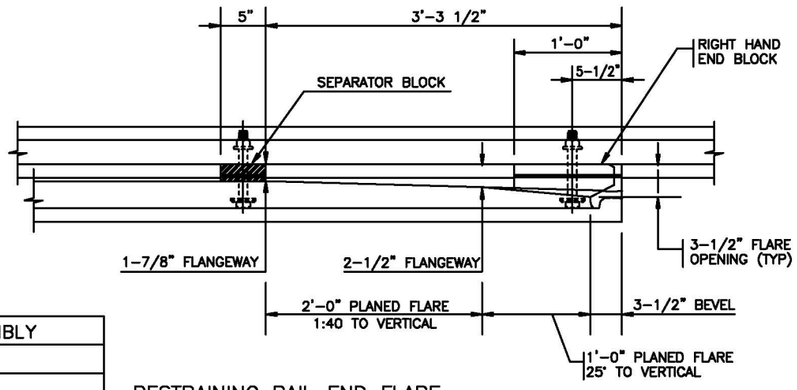

RESTRAINING RAIL END FLARE
SCALE: 1/8"=1"

DESIGNED	S HICKS	11/06	DATE
DRAWN	A.DAVIS	11/06	DATE
CHECKED	L.PADGETT	11/06	DATE
APPROVED	C.MYERS	11/06	DATE

REFERENCE DRAWINGS	
NUMBER	DESCRIPTION

REVISIONS		
DATE	BY	DESCRIPTION
11/2006	CENF	ADDED NOTES
07/2007	CENF	REDUCED LENGTH OF DF PLATE

WASHINGTON METROPOLITAN AREA TRANSIT AUTHORITY
OFFICE OF ENGINEERING SUPPORT SERVICES

SUBMITTED L.R.Padgett 10/2007 DATE
APPROVED 10/2007 DATE

TRACKWORK STANDARD DRAWING
RESTRAINING RAIL/RUNNING RAIL DIRECT FIXATION DETAILS

SCALE: AS SHOWN
DRAWING NO.: ST-TW-RR-006

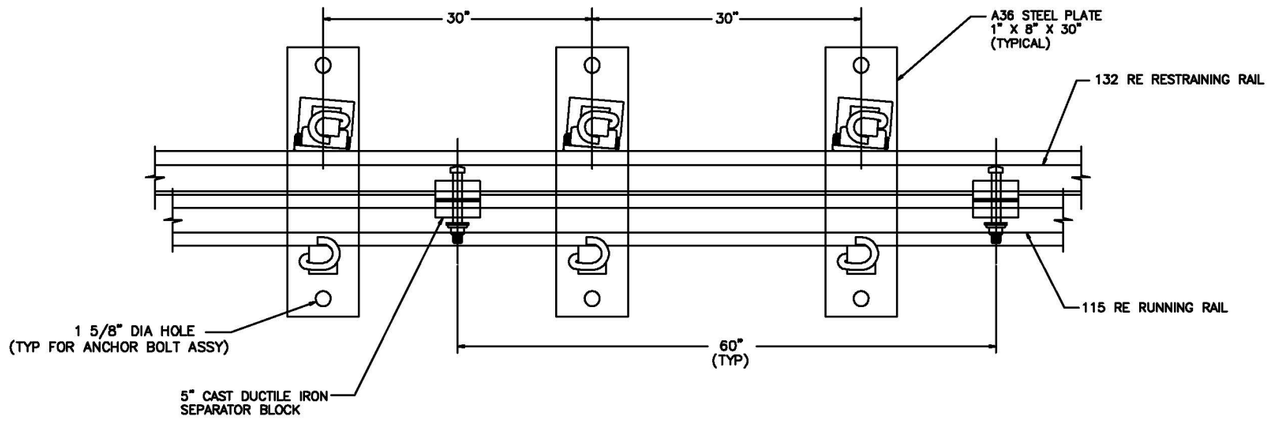

PLAN 132 RE VERTICAL RESTRAINING RAIL

SCALE: 1/8"=1"

NOTES:

1. X-RAY INVERT PRIOR TO CORE DRILLING FOR ANCHOR ASSEMBLY TO PREVENT DAMAGE/CONTACT WITH STRUCTURAL REINFORCEMENT.
2. MAXIMUM DRILLING DEPTH TO BE 5" $\pm\frac{1}{2}$".
3. INVERT DRAINAGE TO BE AS SPECIFIED IN WMATA DESIGN CRITERIA.

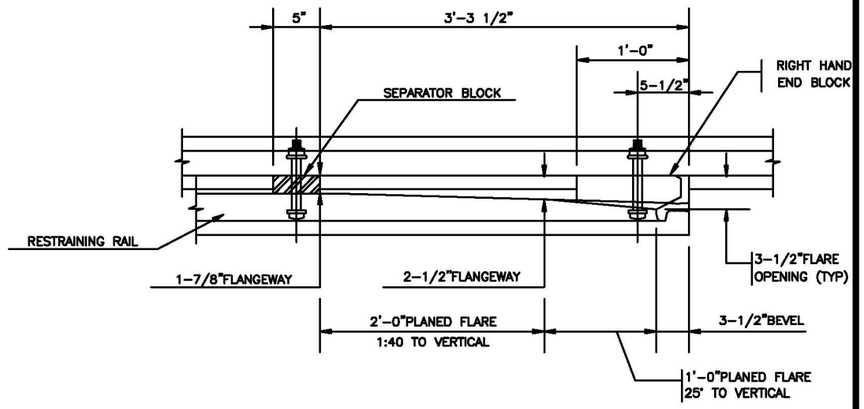

RESTRAINING RAIL END SECTION

SCALE: NONE

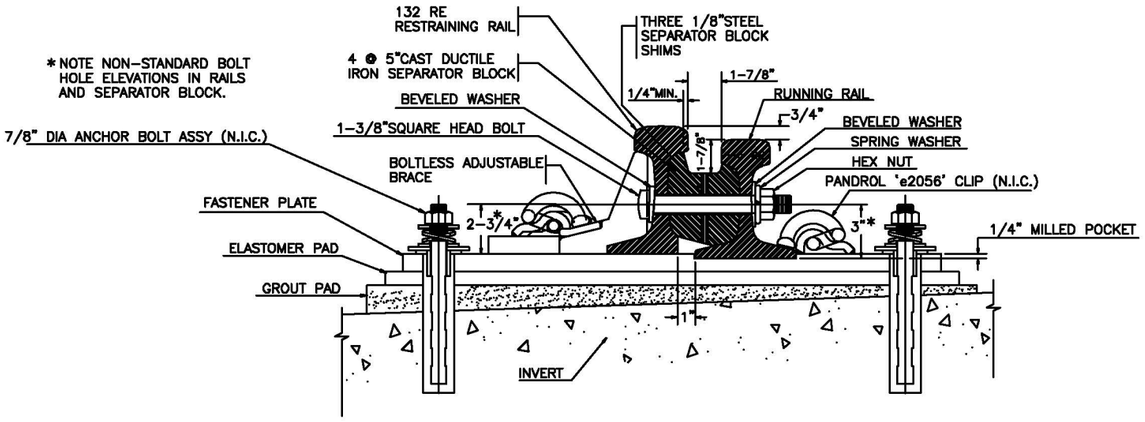

SECTION THRU CENTERLINE OF SEPARATOR BLOCK
FOR 132 RE RESTRAINING RAIL

SCALE: 1/4"=1"

DESIGNED	R. REYES	12/03 DATE
DRAWN	R. HOOKER	12/03 DATE
CHECKED	R. REYES	12/03 DATE
APPROVED		DATE

REFERENCE DRAWINGS	
NUMBER	DESCRIPTION

REVISIONS		
DATE	BY	DESCRIPTION
7/2007	CENF	ADDED NOTES

WASHINGTON METROPOLITAN AREA TRANSIT AUTHORITY

OFFICE OF ENGINEERING SUPPORT SERVICES

SUBMITTED 10/2007 DATE

APPROVED 10/2007 DATE

TRACKWORK DESIGN DRAWING

VERTICAL RESTRAINING RAIL DETAILS DIRECT FIXATION

SCALE: NOT TO SCALE

DRAWING NO. ST-TW-RR-007

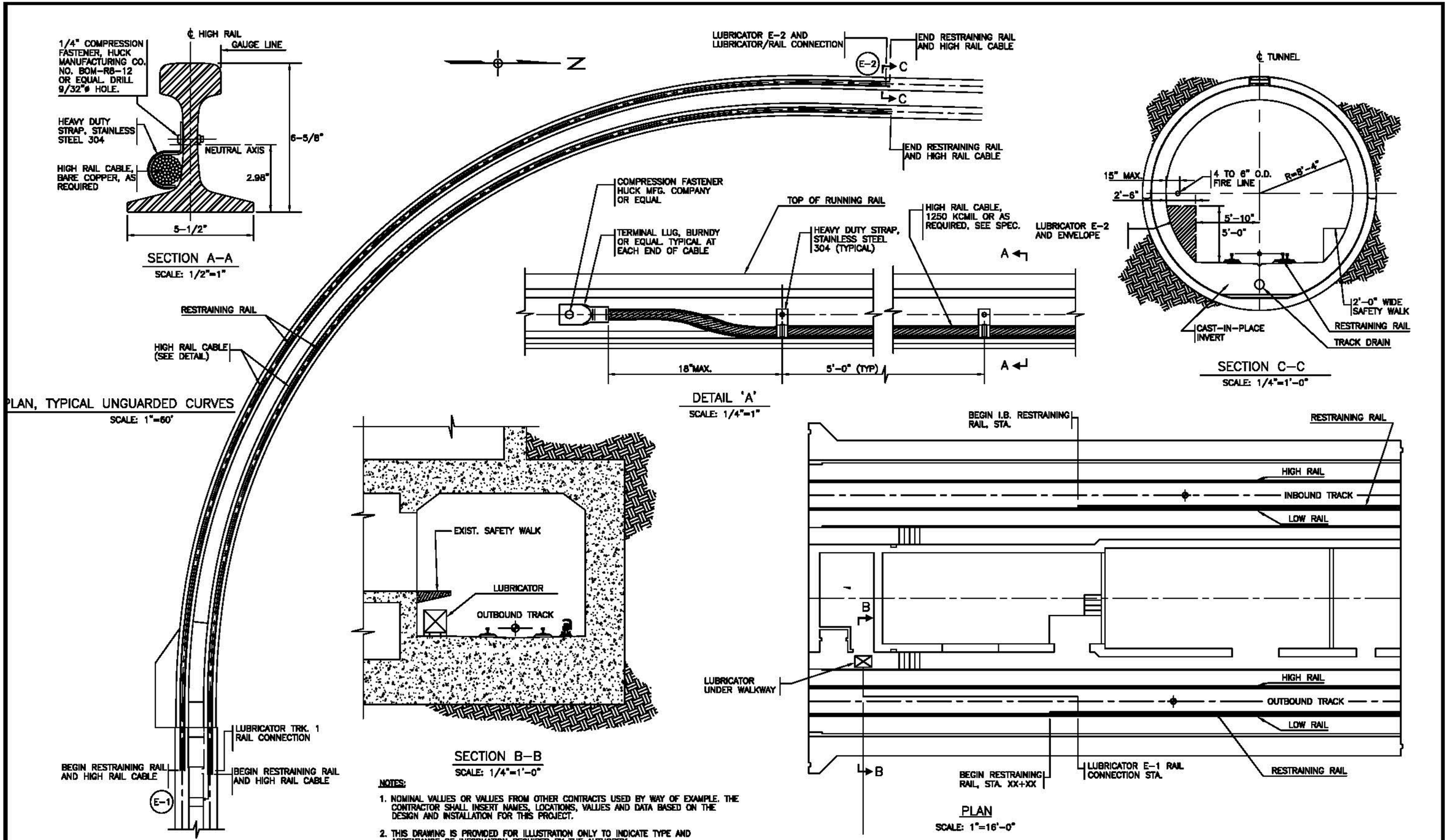

SECTION A-A
SCALE: 1/2"=1"

PLAN, TYPICAL UNGUARDED CURVES
SCALE: 1"=60'

DETAIL 'A'
SCALE: 1/4"=1"

SECTION C-C
SCALE: 1/4"=1'-0"

SECTION B-B
SCALE: 1/4"=1'-0"

PLAN
SCALE: 1"=16'-0"

NOTES:

1. NOMINAL VALUES OR VALUES FROM OTHER CONTRACTS USED BY WAY OF EXAMPLE. THE CONTRACTOR SHALL INSERT NAMES, LOCATIONS, VALUES AND DATA BASED ON THE DESIGN AND INSTALLATION FOR THIS PROJECT.
2. THIS DRAWING IS PROVIDED FOR ILLUSTRATION ONLY TO INDICATE TYPE AND APPEARANCE OF INFORMATION REQUIRED BY THE AUTHORITY.

DESIGNED	S HICKS	12/04 DATE
DRAWN	A.DAVIS	11/06 DATE
CHECKED	L.PADGETT	11/06 DATE
APPROVED	C.MYERS	11/06 DATE

REFERENCE DRAWINGS

NUMBER	DESCRIPTION

REVISIONS

DATE	BY	DESCRIPTION
12/2006	CENF	MINOR REVISIONS

WASHINGTON METROPOLITAN AREA TRANSIT AUTHORITY

OFFICE OF ENGINEERING SUPPORT SERVICES

SUBMITTED LRPadgett 10/2007 DATE

APPROVED [signature] 10/2007 DATE

TRACKWORK STANDARD DRAWING
RESTRAINING RAILS AND LUBRICATORS E-1 & E-2

SCALE AS SHOWN

DRAWING NO. ST-TW-RR-020

NOTES:

1. NOMINAL VALUES OR VALUES FROM OTHER CONTRACTS USED BY WAY OF EXAMPLE. THE CONTRACTOR SHALL INSERT NAMES, LOCATIONS, VALUES AND DATA BASED ON THE DESIGN AND INSTALLATION FOR THIS PROJECT.
2. THIS DRAWING IS PROVIDED FOR ILLUSTRATION ONLY TO INDICATE TYPE AND APPEARANCE OF INFORMATION REQUIRED BY WMATA.

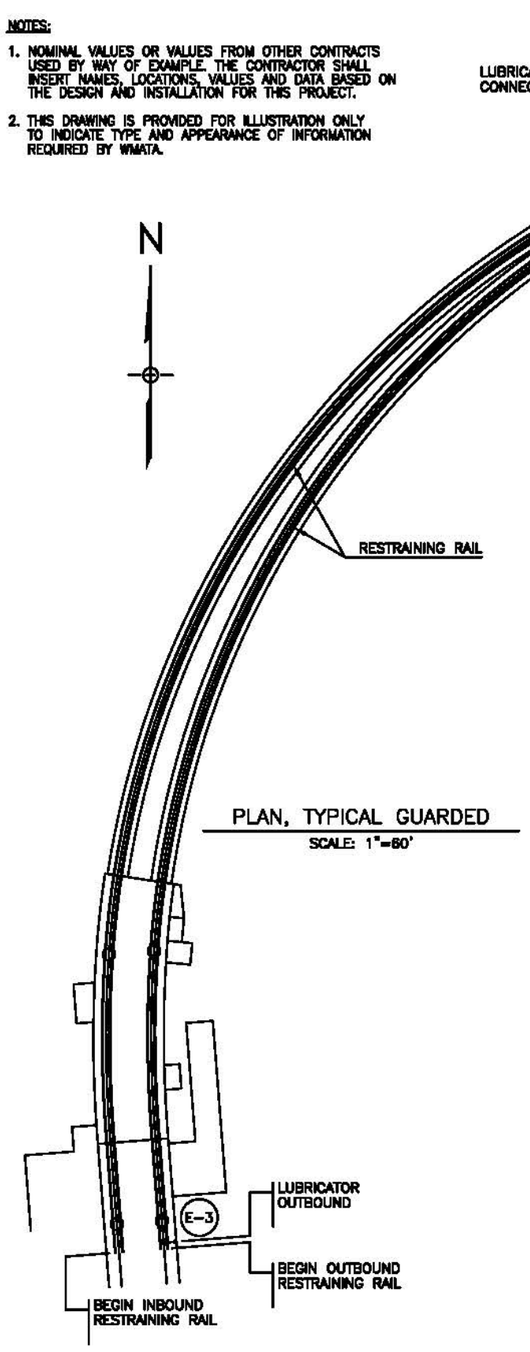

PLAN, TYPICAL GUARDED
SCALE: 1"=60'

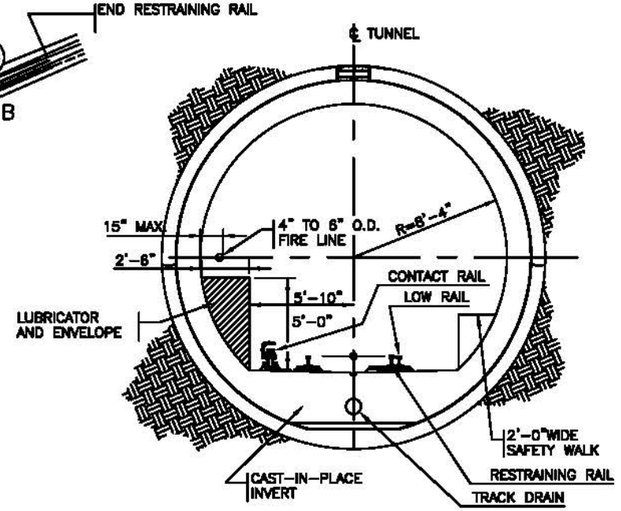

SECTION B–B
SCALE: 1/4"=1'-0"

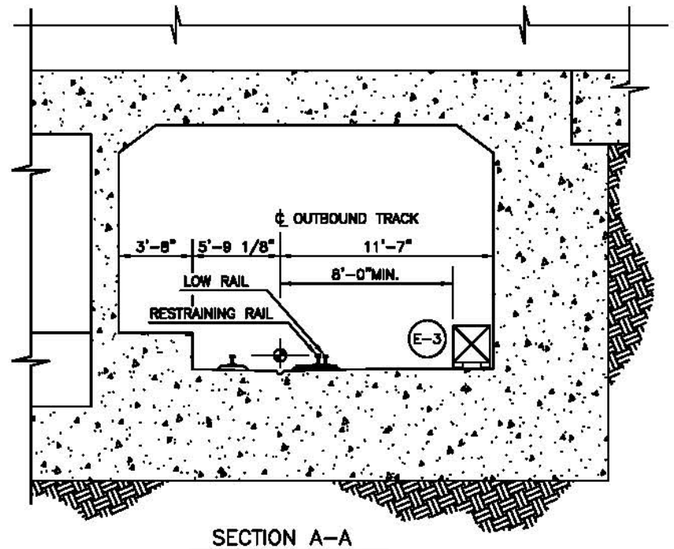

SECTION A–A
SCALE: 1/4"=1'-0"

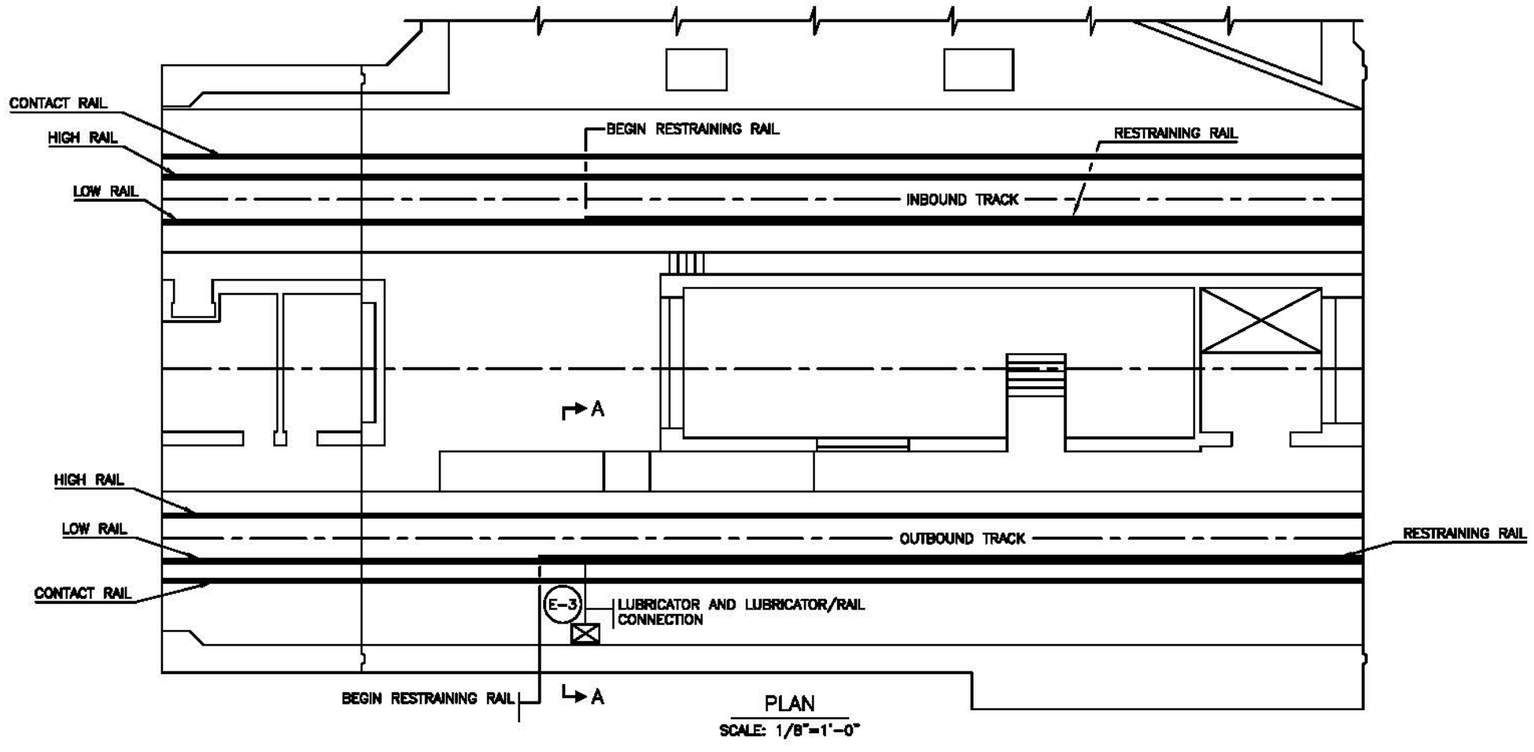

PLAN
SCALE: 1/8"=1'-0"

DESIGNED	S HICKS	12/94 DATE
DRAWN	ADAMS	11/08 DATE
CHECKED	LPADGETT	11/08 DATE
APPROVED	CAYERS	11/08 DATE

REFERENCE DRAWINGS	
NUMBER	DESCRIPTION

REVISIONS		
DATE	BY	DESCRIPTION

WASHINGTON METROPOLITAN AREA TRANSIT AUTHORITY

OFFICE OF ENGINEERING SUPPORT SERVICES

SUBMITTED LRPadgett 10/2007 DATE

APPROVED 10/2007 DATE

TRACKWORK STANDARD DRAWING
RESTRAINING RAILS AND LUBRICATORS E-3 & E-4

SCALE: AS SHOWN

DRAWING NO.: ST-TW-RR-021

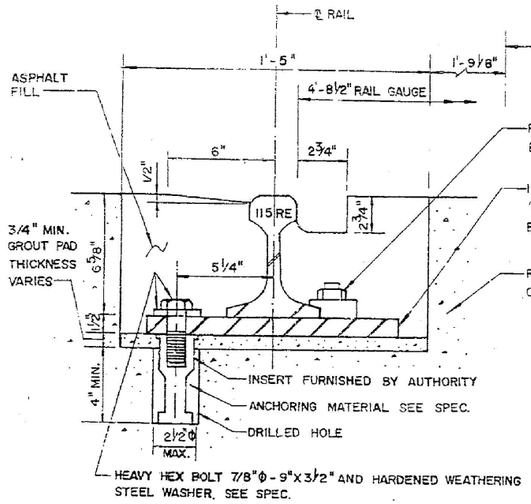

1 TYP. RAIL FASTENER AT CONC. SLAB
3"=1'-0"

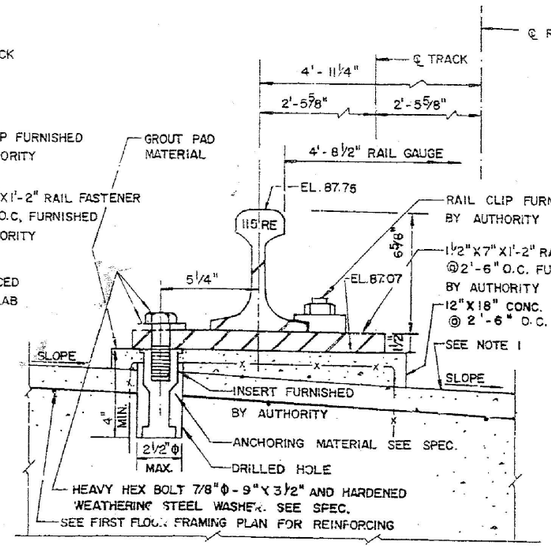

2 TYP. RAIL FASTENER AT WASH PIT
3"=1'-0"

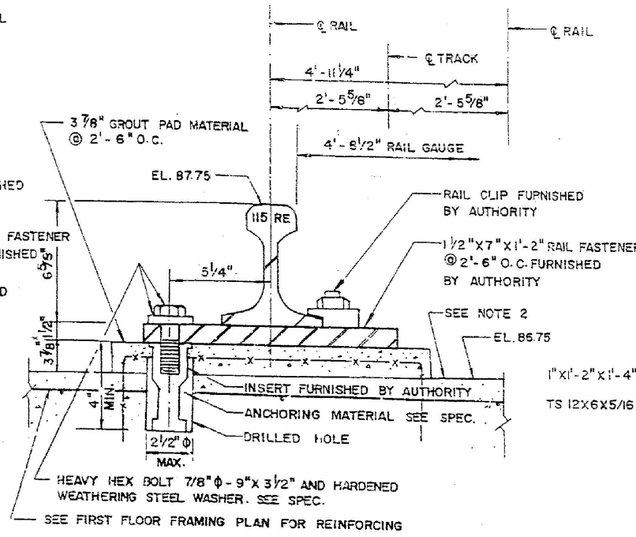

3 TYP. RAIL FASTENER AT CONC. SLAB
3"=1'-0"

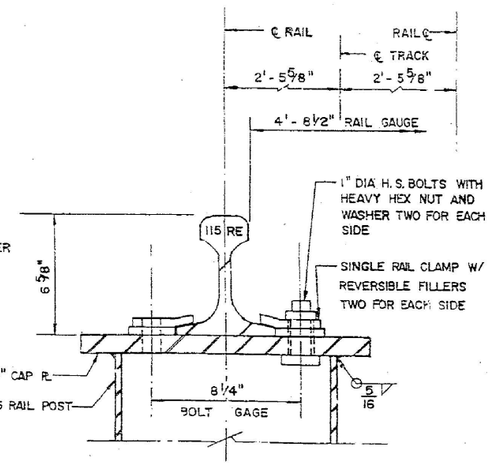

4 TYP. RAIL SEAT AT TUBE
3"=1'-0"

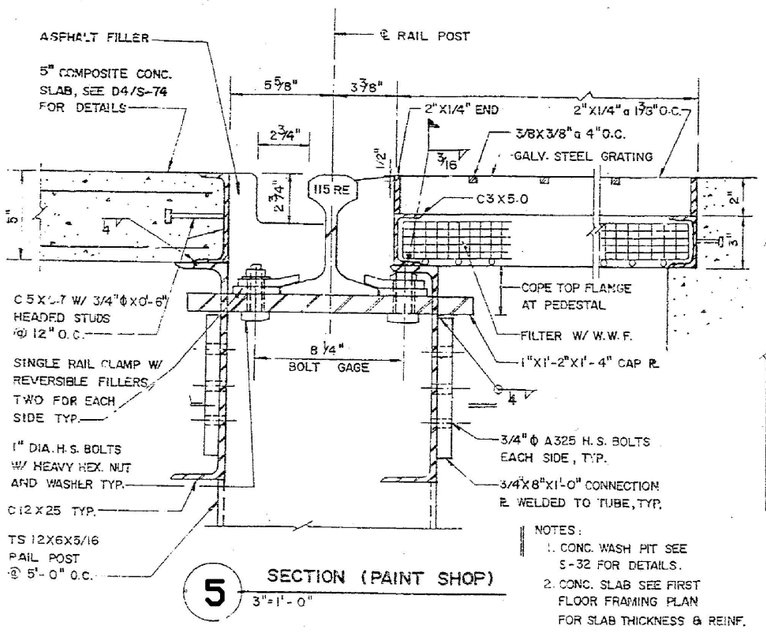

5 SECTION (PAINT SHOP)
3"=1'-0"

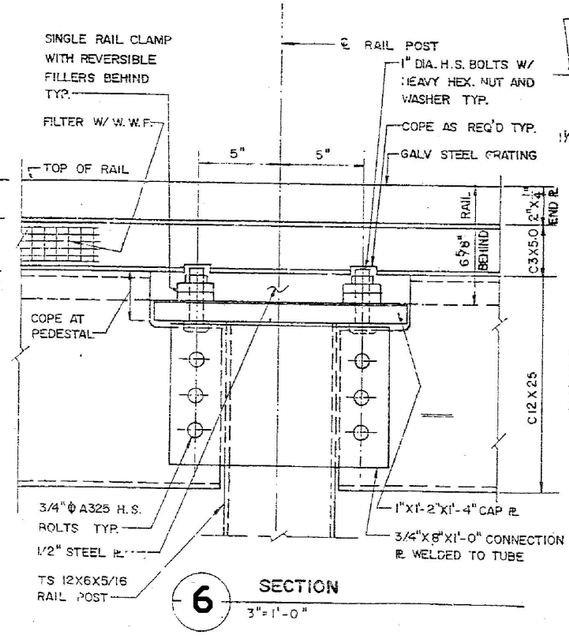

6 SECTION
3"=1'-0"

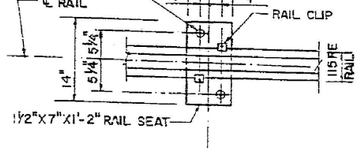

7 PLAN - RAIL FASTENER AT CONC. SLAB
1"=1'-0"

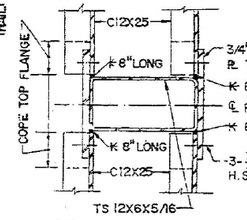

8 SECTION
1½"=1'-0"

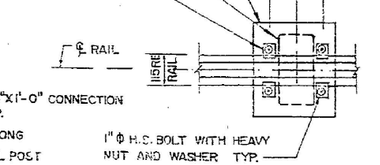

9 PLAN - RAIL FASTENER AT TUBE
1"=1'-0"

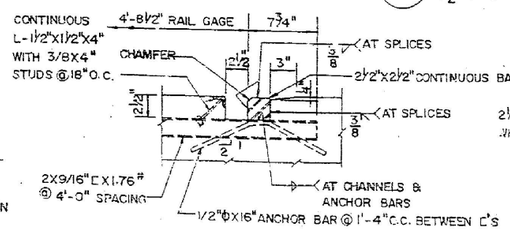

10 TYP. BAR RAIL DETAIL
1½"=1'-0"

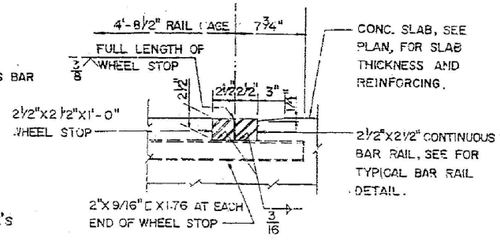

11 TYP. WHEEL STOP DETAIL
1½"=1'-0"

DESIGNED	DCCO	11/06 DATE
DRAWN	A.DAVIS	11/06 DATE
CHECKED	L.PADGETT	11/06 DATE
APPROVED	C.MYERS	11/06 DATE

REFERENCE DRAWINGS

NUMBER	DESCRIPTION

REVISIONS

DATE	BY	DESCRIPTION
11/2006	CENF	ADDED DWG TO WMATA STD-TW SET

WASHINGTON METROPOLITAN AREA TRANSIT AUTHORITY

OFFICE OF ENGINEERING SUPPORT SERVICES

SUBMITTED L.R.Padgett 10/2007 DATE

APPROVED 10/2007 DATE

TRACKWORK STANDARD DRAWING
EMBEDDED TRACKWORK – TYPICAL
RAIL FASTENING DETAILS & SECTIONS

SCALE: AS SHOWN

DRAWING NO.: ST-TW-RR-022

ABBREVIATIONS

AC	ASBESTOS CEMENT DUCT OR CONDUIT
ACP	ASBESTOS CEMENT PIPE
AV	AIR VALVE
BKC	BRICK & CONCRETE
BO	BLOW–OFF
BR	BRICK
CB	CATCH BASIN OR DROP INLET
CC	CONCRETE CONDUIT
CIP	CAST IRON PIPE
CIPC	CAST IRON PIPE, CEMENT LINED
CMP	CORRUGATED METAL PIPE
COMB. S	COMBINED SYSTEM SEWER
CONC.	CONCRETE
CP	CONCRETE PIPE
CTU	CAR TRACKS, UNDERGROUND THIRD RAIL
CTT	CAR TRACKS, TROLLEY
CWP	CREOSOTED WOOD PIPE
CYL	CYLINDER PIPE, VITRIFIED CLAY
DI	DUCTILE IRON PIPE
DILM	DUCTILE IRON PIPE, CEMENT LINED & COATED, MECH. JOINT
DILMR	DUCTILE IRON PIPE, CEMENT LINED & COATED, MECH. JOINT, RESTRAINED
DILP	DUCTILE IRON PIPE, CEMENT LINED & COATED PUSH–ON JOINT
D	DUCT
E	ELECTRIC
E 12–D MTD(4X3)	ELECTRICAL, 12 WAY, MULTIPLE TITLE DUCT (4 WIDE X 3 HIGH)
EXIST	EXISTING
FA	FIRE ALARM
FD	FIBRE DUCT
FH	FIRE HYDRANT
FR	FRAME
G	GAS
GHP	GAS, HIGH PRESSURE
GHPW	GAS, HIGH PRESSURE, WRAPPED
KD	KORDUCT
MH	MANHOLE
MTD	MULTIPLE TILE DUCT OR CONDUIT
P	PEDESTRAIAN SIGNAL
PM	PARKING METER
PCP	PRESTRESSED CONCRETE PIPE
PC	POLICE COMMUNICATIONS
PR	PEDESTRIAN & REGULATORY SIGNALS
PROP	PROPOSED
R	REGULATORY SIGNAL (NO LEFT TURN, ONE WAY)
RCP	REINFORCED CONCRETE PIPE
RCPR	REINFORCED CONCRETE PIPE, RUBBER JOINT
REC	RECORD
SAN. S	SANITARY SEWER
SP	STEEL PIPE
SPW	STEEL PIPE, WRAPPED
SS	STORM SEWER
STM	STEAM LINE
STD	STANDARD
STY	STORY
TDL	TRAFFIC DETECTOR LOOP
T	TELEPHONE
TT	TRAFFIC TREADLE
VCP	VITRIFIED CLAY PIPE
VCPX	VITRIFIED CLAY PIPE–EXTRA STRENGTH
VCPXR	VITRIFIED CLAY PIPE–EXTRA STRENGTH, RUBBER GASKET
W	WATER
WIP	WROUGHT IRON PIPE
WSLP	WELDED STEEL CEMENT LINED & COATED PIPE
WSP	WELDED STEEL PIPE
WU	WESTERN UNION

SYMBOLS

EXISTING FACILITY
EXISTING SEWERS 27" DIA. & LARGER
EXISTING WATER MAINS 16" & LARGER
MAINTAIN SERVICE & REPLACE
MAINTAIN COMPLETE IN PLACE
REMOVE & REPLACE
FUTURE FACILITY (BY OTHERS)
PROPOSED FACILITY
PROPOSED SEWERS 27" DIA & LARGER
PROPOSED WATER MAINS 16" & LARGER
EXPOSE & MAINTAIN EXISTING CABLES & REPLACE DUCTS & MANHOLES
EXISTING CATCH BASINS & CONNECTIONS, STANDARD & ELONGATED
PROPOSED CATCH BASINS & CONNECTIONS, STANDARD & ELONGATED
EXISTING ALLEY BASINS & CONNECTIONS, SINGLE & DOUBLE
PROPOSED ALLEY BASINS & CONNECTIONS, SINGLE & DOUBLE
EXISTING ALLEY BASINS (DROP INLET), TO BE REMOVED & REPLACED
SEWER MANHOLES, EXISTING & PROPOSED
EXISTING SEWER MANHOLE–COVERED
WATER VALVES, EXISTING & PROPOSED
GAS VALVE
TEMPORARY FACILITY
UTILITY POLE – GUY POLE
E E — ELECTRIC – AERIAL
T T — TELEPHONE
ET ET — JOINT ELECTRIC AND TELEPHONE
STREET LIGHT – WITH TRAFFIC LIGHT
TRAFFIC LIGHT – PEDESTRIAN SIGNAL ON POLE, NO STREET LIGHT.
STREET AND TRAFFIC LIGHT WITH PEDESTRIAN SIGNAL
R R — REGULATORY SIGNALS (ONE WAY, NO LEFT TURN, ETC.)
PR PR — COMBINATION–OF– SIGNALS

LIGHT POLE–BRACKET TYPE, EXISTING & PROPOSED
LIGHT POLE, EXISTING &PROPOSED
TRAFFIC SIGNAL CONTROL PANEL EXISTING & PROPOSED
PC FA — POLICE COMMUNICATIONS &FIRE ALARM
ABANDONED STREET CAR TRACK–3RD RAIL
ABANDONED STREET CAR TRACK–TROLLEY
ABANDONED FACILITY
EXISTING FACILITY TO BE ABANDONED
EXISTING UTILITY MANHOLES SHOWING COMPANY NUMBER
E40 C– D– / T40 C– D– — C– SURFACE TO INSIDE TOP; D– HEADROOM
PROPOSED UTILITY MANHOLE
PRIVATE VAULT
CATHODIC TEST STATION
TRAFFIC DETECTOR LOOP
EXISTING TRAFFIC TREADLE
EXISTING CATENARY POLE
PM — PARKING METER
EXISTING TRAFFIC SIGN
WATER METER
FH — FIRE HYDRANT & CONNECTION EXISTING & PROPOSED

NOTES

1. FACILITIES SHOWN ON THESE DRAWINGS HAVE BEEN COMPILED FROM INFORMATION FURNISHED BY VARIOUS UTILITY OWNERS ACCURACY AND COMPLETENESS IS NOT GUARANTEED
2. BUILDING SERVICE CONNECTIONS TO ABUTTING PROPERTIES GENERALLY ARE NOT SHOWN,BUT MUST BE MAINTAINED.
3. SIZE OF VCP, CP & RCP SEWERS IS EXPRESSED IN INCHES, VIZ 12",36" & 108" SIZE OF BR & BKC SEWERS AS EXPRESSED IN FEET & NCHES, VIZ 3'–0",4'–6" & 5'–0".
4. PRIOR TO ABOUT 1929, WHEN BELL & SPIGOT VCP WITH BITUMINOUS JOINTS WAS ADOPTED AS STANDARD, VCP SEWERS UTILIZED CYLINDRICAL PIPE (NO BELL & SPIGOT) WITH CONCRETE CRADLE AND CONCRETE COLLAR AROUND BUTT JOINTS OF PIPE
5. ELECTRIC MANHOLES DESIGNATED BY COMPANY NUMBERS 40 & ABOVE ARE GENERALLY NETWORK MANHOLES HOUSING ELECTRIC TRANSFORMERS, ALL HAVE VENTILATING GRATE COVERS
6. THESE SYMBOLS AND ABBREVIATIONS HAVE BEEN ADOPTED FOR USE IN METRO DESIGNS AND MAY NOT BE IN COMPLETE AGREEMENT WITH THOSE USED BY INDIVIDUAL UTILITIES OR JURISDICTIONS

DESIGNED E.A.P. 10–67 DATE
DRAWN L.E. HICKS 10–67 DATE
CHECKED DATE
APPROVED R.S. O'NEIL 12–67 DATE

REFERENCE DRAWINGS

NUMBER	DESCRIPTION

REVISIONS

DATE	BY	DESCRIPTION
08/2001	ENGA	Revised and issued by the Authority

WASHINGTON METROPOLITAN AREA TRANSIT AUTHORITY

DEPARTMENT OF TRANSIT SYSTEM DEVELOPMENT
OFFICE OF ENGINEERING AND ARCHITECTURE

SUBMITTED DATE

APPROVED DIRECTOR May 3, 2001 DATE

UTILITY STANDARD DRAWING
ABBREVIATIONS, SYMBOLS & GENERAL NOTES

SCALE NOT TO SCALE

DRAWING NO. ST–U–014

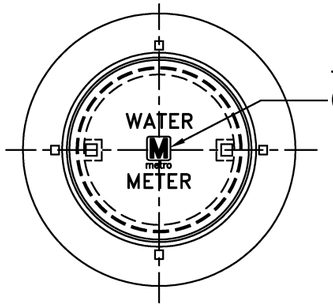

DETAIL 1
WATER METER COVER
(LIGHT DUTY)

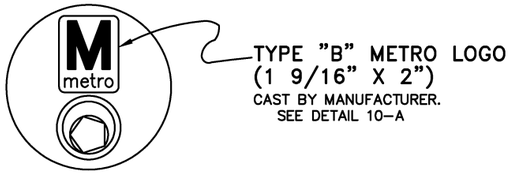

DETAIL 3
(REF. DWG. ST-SO-1)
CURB COCK BOX COVER
CAST IRON TO FIT 3" I.D. BOX
FOR PIEZOMETER, WATER
AND GAS SERVICES

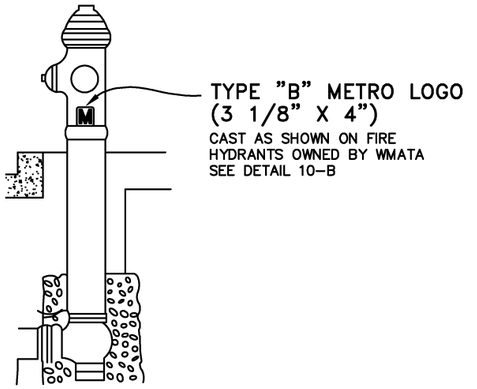

DETAIL 7
FIRE HYDRANT

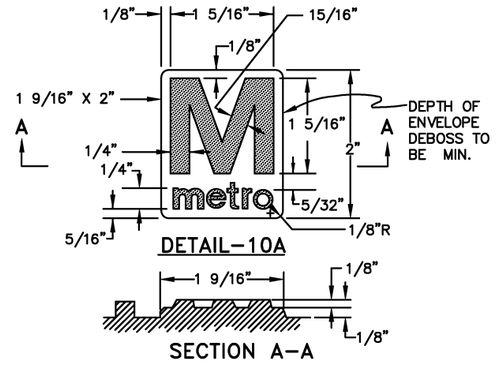

DETAIL-10A

SECTION A-A

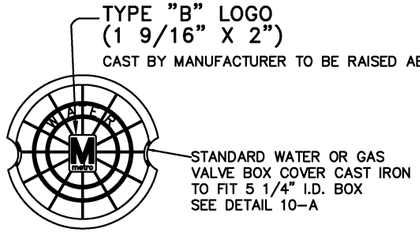

DETAIL 4
ROADWAY TYPE WATER OR GAS
VALVE BOX COVER

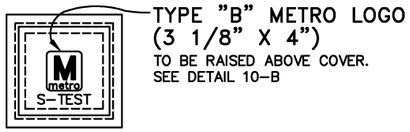

DETAIL 8
STRAY CURRENT TEST BOX

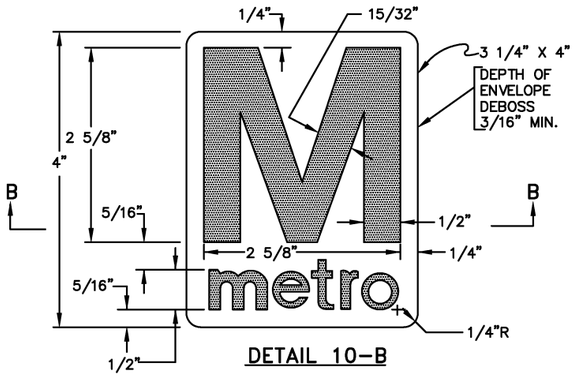

DETAIL 10-B

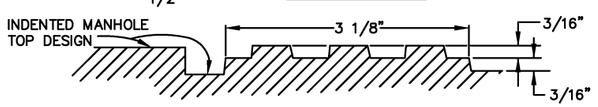

SECTION B-B
TYPE "B" METRO LOGO

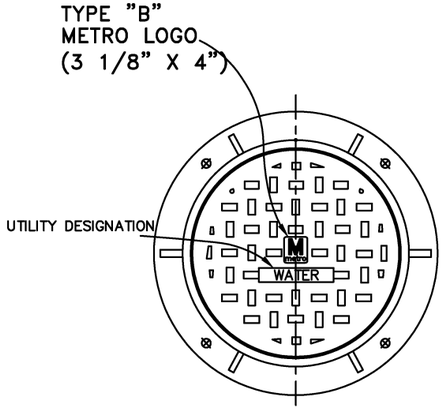

DETAIL 2
TYPICAL LOGO AND UTILITY DESIGNATIONS
FOR ALL METRO MANHOLE COVERS 24"
DIA. AND LARGER

TO BE CAST WITH APPROPRIATE UTILITY NAME FOR MANHOLES BELONGING TO WMATA AS FOLLOWS

SEWER	JOINT UTILITIES
ELECTRIC	ELECTRIC
TRACTION POWER	STEAM
TRAIN CONTROL	WATER
COMMUNICATION	CHILLED WATER

NOTE: RAISED LOGO & SERVICE NAME CAST BY MANUFACTURER. SEE DETAIL 10-B.

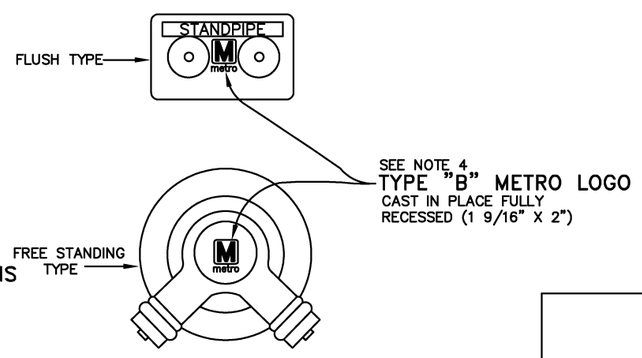

DETAIL 5
SIAMESE FIRE HOSE CONNECTION

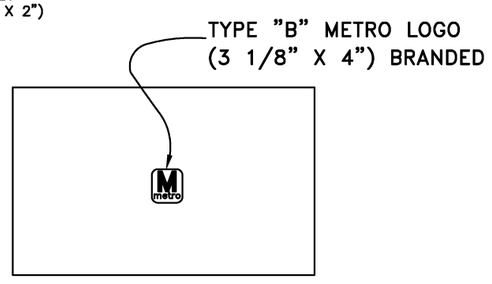

DETAIL 9
PRECAST CONCRETE COVER
FOR 2'-6"X4'-0" CABLE PIT
NEGATIVE RETURN (ELECT.)

GENERAL NOTES

1. TYPE "B" METRO LOGO IS TO BE DISPLAY CAST INTO UTILITY HARDWARE COMPONENTS IN THE LOCATION, SIZE AND DEPTH SPECIFIED FOR EACH DETAIL SHOWN.
2. LOGO LETTER TYPE IS "HELVETICA MEDIUM."
3. TWO BASIC ENVELOPE SIZES FOR TYPE "B" METRO LOGO ARE 1 9/16" X 2" AND 3 1/8" X 4" RESPECTIVELY AS INDICATED IN EACH DETAIL. LETTER "M" AND WORD "metro" ARE TO BE EMBOSSED TO 3/16" OR 1/8" ABOVE SURFACE LEVEL AREA WITHIN THE ENVELOPE. THE SURFACE WITHIN ENVELOPE TO BE 3/16" OR 1/8" HEIGH ABOVE THE NORMAL SURFACE LEVEL OF THE HARDWARE COMPONENT AS SHOWN IN DETAIL 10B AND 10A, UNLESS RECESSED LOGO IS NOTED.
4. CAST TYPE B METRO LOGO FOR SIAMESE CONNECTIONS ONLY WHEN NOT LOCATED ON WMATA PROPERTY.

DESIGNED	J.E. SERRIN	3-21-73 DATE
DRAWN	BUENO, BEAUDET	3-29-73 DATE
CHECKED	E. WILSON	3-29-73 DATE
APPROVED	R.S. O'NEIL	7-2-73 DATE

REFERENCE DRAWINGS	
NUMBER	DESCRIPTION

REVISIONS		
DATE	BY	DESCRIPTION
08/2001	ENGA	Revised and issued by the Authority

WASHINGTON METROPOLITAN AREA TRANSIT AUTHORITY

DEPARTMENT OF TRANSIT SYSTEM DEVELOPMENT
OFFICE OF ENGINEERING AND ARCHITECTURE

SUBMITTED _____ DATE

APPROVED _____ DIRECTOR May 3, 2001 DATE

UTILITY STANDARD DRAWING
WMATA UTILITIES IDENTIFICATION WITH TYPE "B" METRO LOGO

SCALE: NOT TO SCALE

DRAWING NO.: ST-U-064

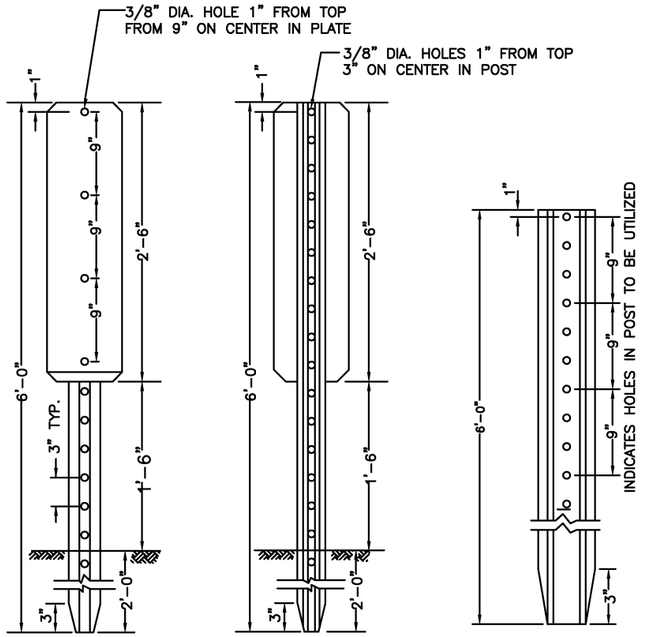

DETAIL 1

ELEVATION

SCALE 1 1/2"=1'

DETAIL 2

MARKER POST

NO SCALE

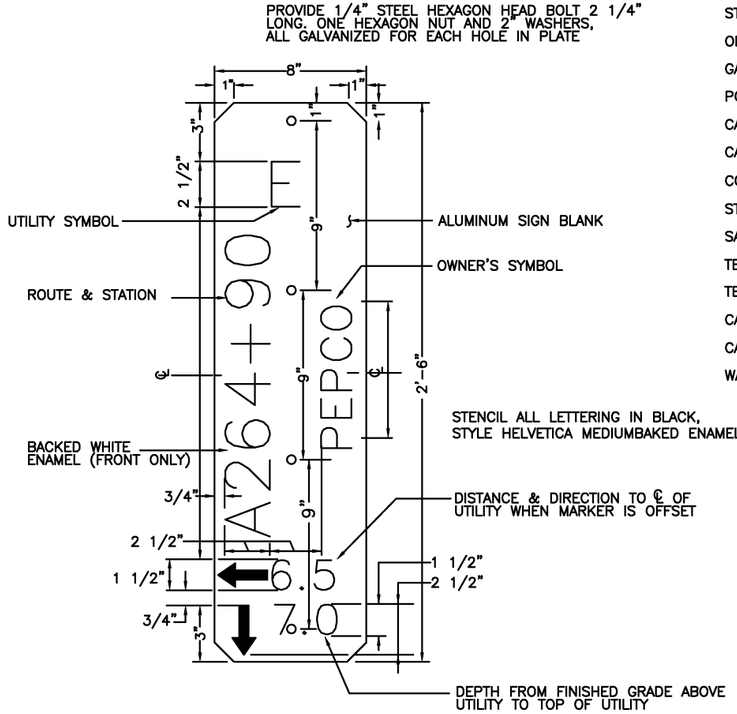

DETAIL 3

TARGET PLATE LAYOUT

SCALE 3"=1'

UTILITY	SYMBOL
STEAM TUNNEL	ST
STEAM LINE	S
OIL OR GASOLINE LINES	F
GAS LINE	G
POWER LINE	E
CABLE – STREET LIGHT	CS
CABLE – TRAFFIC LIGHT	CT
COMBINED SYSTEM SEWER	SC
STORM SEWER OR CULVERT	SS
SANITARY SEWER	SAN
TELEPHONE LINE	T
TELEGRAPH LINE	TE
CABLE – FIRE ALARM	CF
CABLE – POLICE	CP
WATER MAIN	W

OWNER	SYMBOL
DISTRICT OF COLUMBIA	DC
CHESAPEAKE & POTOMAC TELEPHONE COMPANY	C & P
POTAMAC ELECTRIC POWER COMPANY	PEPCO
VIRGINIA POWER CO.	VEPCO
WASHINGTON SUBURBAN SANITARY COMMISSION	WSSC
ARLINGTON COUNTY	ARL CO.
FAIRFAX COUNTY	FX CO.
FAIRFAX COUNTY WATER AUTHORITY	FCWA
ALEXANDRIA	ALEX
FALLS CHURCH	FA CH
MARYLAND–NATIONAL CAPITAL PARK AND PLANNING COMMISSION	M–NCPPC
PENTAGON	PENT
VIRGINIA DEPT. OF TRANSPORTATION	VDOT
MONTGOMERY COUNTY	MONT CO.
PRINCE GEORGE'S COUNTY	PGCO
CITY OF ROCKVILLE	ROCK
MARYLAND STATE HIGHWAY ADMINISTRATION	MSHA
WASHIGTON GAS LIGHT COMPANY	WGLCo
BALTIMORE GAS & ELECTRIC	BGE
WESTERN UNION	WU
PLANTATION PIPE LINE	PPL
GENERAL SERVICES ADMINSTRATION	GSA
COLONIAL PIPE LINE	CPL
WASHINGTON METROPOLITAN AREA TRANSIT AUTHORITY	WMATA
TRANSCONTINENTAL GAS PIPE LINE CORP.	TRANSCO

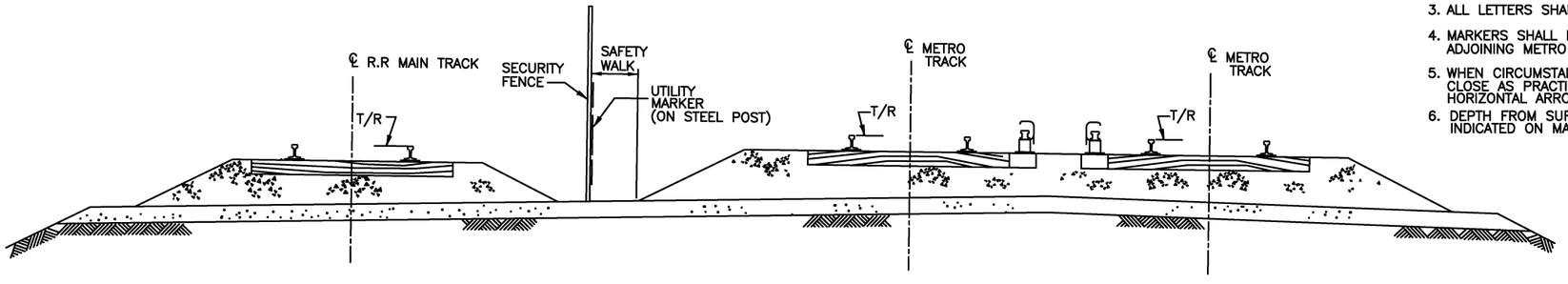

DETAIL 4

TYPICAL LOCATION OF UTILITY MARKER

NO SCALE

NOTES:

1. UTILITY MARKERS SHALL BE PROVIDED TO INDICATE UNDERGROUND UTILITY LINES WHICH CROSS AT–GRADE AND EMBANKMENT SECTIONS OF THE METRO RIGHT–OF–WAY (ROW); EXCEPT METRO OWNED FACILITIES WHICH ARE PARALLEL WITH OR ENTIRELY WITHIN THE ROW, OR OTHER CROSSINGS HAVING VISIBLE MANHOLES, INLETS, OR OTHER UTILITY STRUCTURES
2. MARKERS SHALL BE AS SHOWN ON THIS SHEET WITH STATIONING TO THE NEAREST FOOT.
3. ALL LETTERS SHALL BE HELVETICA MEDIUM.
4. MARKERS SHALL BE PLACED AS SHOWN IN DETAIL 4 WITH TARGETS FACING AND PARALLEL WITH ADJOINING METRO TRACK.
5. WHEN CIRCUMSTANCES PROHIBIT PLACING MARKER ON CENTERLINE OF UTILITY IT SHALL BE LOCATED AS CLOSE AS PRACTICABLE. THE DIRECTION OF UTILITY FROM THE MARKER SHALL BE INDICATED BY A HORIZONTAL ARROW AND THE AMOUNT OF OFFSET TO THE NEAREST 0.5' AS SHOWN BY DETAIL 3.
6. DEPTH FROM SURFACE TO TOP OF UTILITY OR ITS CASEMENT PIPE SHALL BE TO NEAREST 0.5' AND SO INDICATED ON MARKER TARGET.

DESIGNED	E.A. PRESS	7–3–74 DATE
DRAWN	CMV / RER	7–10–74 DATE
CHECKED	A RYNTIES	10–6–75 DATE
APPROVED	R.MEIERS	10–6–75 DATE

REFERENCE DRAWINGS	
NUMBER	DESCRIPTION

REVISIONS		
DATE	BY	DESCRIPTION
08/2001	ENGA	Revised and Issued by the Authority

WASHINGTON METROPOLITAN AREA TRANSIT AUTHORITY

DEPARTMENT OF TRANSIT SYSTEM DEVELOPMENT
OFFICE OF ENGINEERING AND ARCHITECTURE

SUBMITTED _____ DATE

APPROVED _____ DIRECTOR May 3, 2001 DATE

UTILITY STANDARD DRAWING
AT GRADE STANDARD UTILITIES MARKERS

SCALE AS NOTED

DRAWING NO. ST–U–066

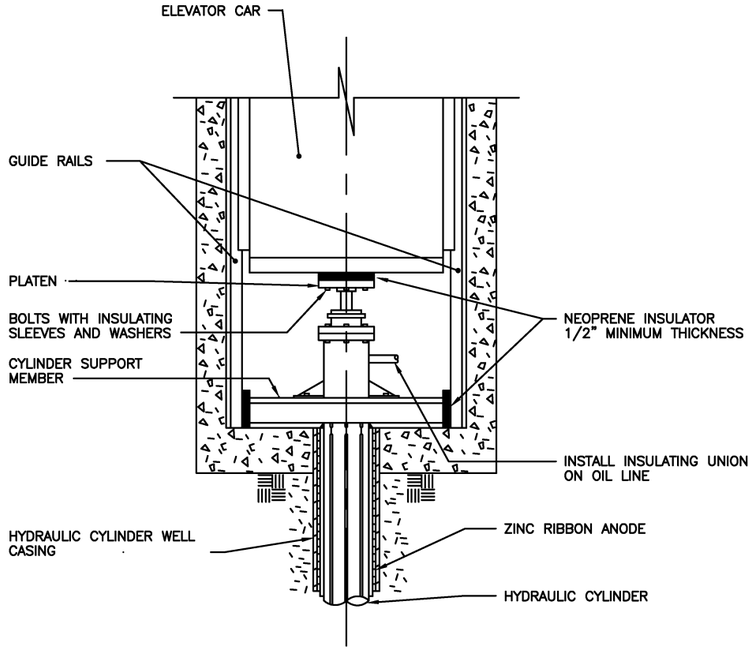

PARTIAL ELEVATION

DIELECTRIC INSULATION
FOR HYDRAULIC ELEVATORS

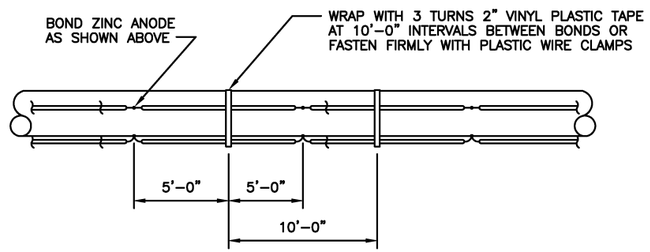

BOND SPACING

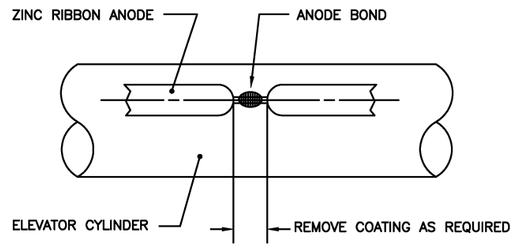

ANODE ATTACHMENT

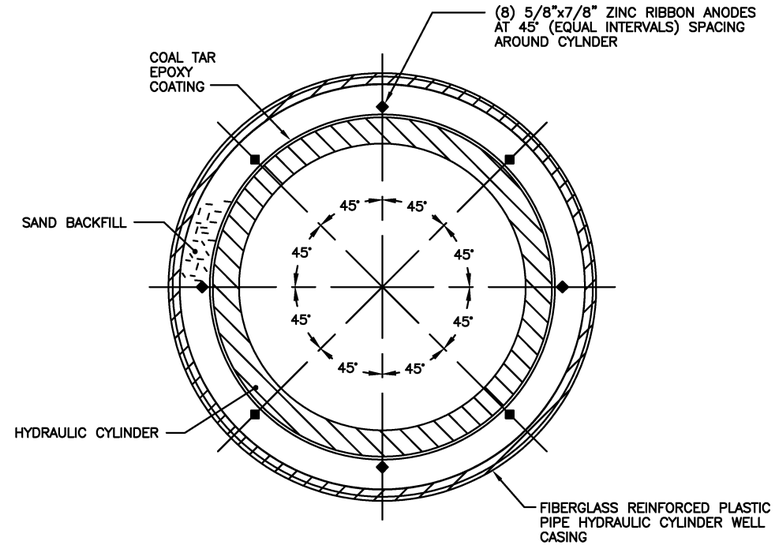

ANODE ORIENTATION

NOTE: FOR ADDITIONAL DETAILS REFER TO DD-A-EL-001 THROUGH DD-A-EL-016, DD-M-108, DD-M-122, DD-M-123 & DD-M-126.

This Drawing Reflects a WMATA standard design approach. Project specific drawings must be developed by the Contractor which reflect this Design Philosophy

DESIGNED	K. PATEL	2-01 DATE
DRAWN	L. POWELL	2-01 DATE
CHECKED	J. BUMANIS	2-01 DATE
APPROVED	R. GANERIWAL	2-01 DATE

REFERENCE DRAWINGS

NUMBER	DESCRIPTION

REVISIONS

DATE	BY	DESCRIPTION
08/2001	SYSP	Revised and issued by the Authority

WASHINGTON METROPOLITAN AREA TRANSIT AUTHORITY

DEPARTMENT OF TRANSIT SYSTEM DEVELOPMENT
OFFICE OF SYSTEMS

SUBMITTED _____ DATE

APPROVED _____ DIRECTOR May 3, 2001 DATE

HYDRAULIC ELEVATOR INSTALLATIONS
CATHODIC PROTECTION OF HYDRAULIC CYLINDERS

SCALE: NOT TO SCALE

DRAWING NO.: ST-ELEV-001

NOTES:

1. ELECTRICAL RACEWAY AREAS,WHERE USED,SHALL BE COVERED WITH METAL CLADDING.
2. SHADED AREAS ARE AVAILABLE FOR ELECTRICAL RACEWAYS. UTILIZE ONLY THOSE AREAS NEEDED FOR REQUIRED ELECTRICAL WIRING.

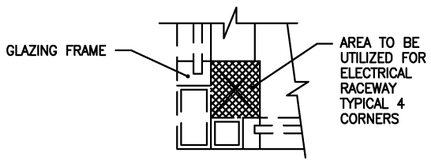

SECTION E–E

(SEE SS–ELEV–1, SS–ELEV–4, SS–ELEV–5 & SS–ELEV–6)

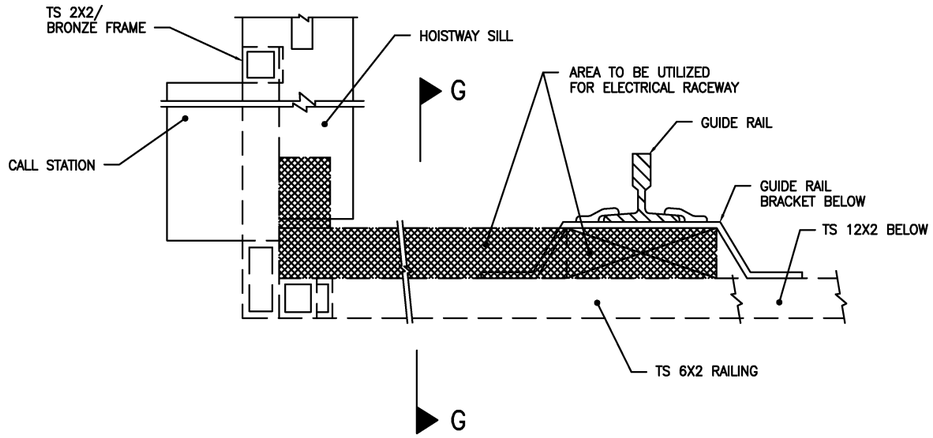

SECTION H–H

(SEE SS–ELEV–1, SS–ELEV–4, SS–ELEV–5 & SS–ELEV–6)

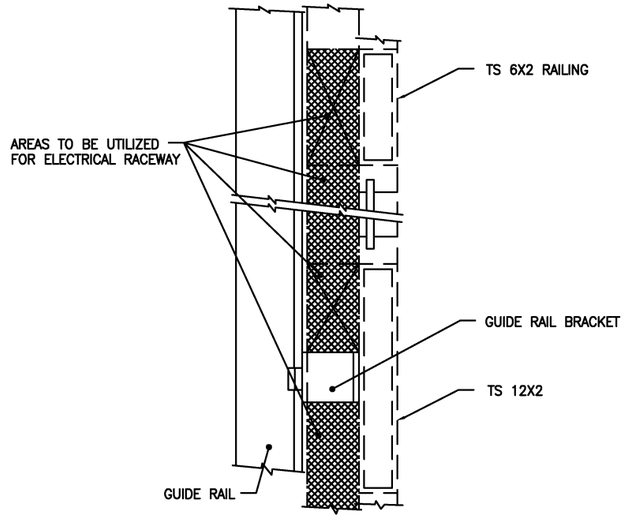

SECTION G–G

(SEE SS–ELEV–1, SS–ELEV–4, SS–ELEV–5 & SS–ELEV–6)

NOTE: FOR ADDITIONAL DETAILS REFER TO DD–A–EL–001 THROUGH DD–A–EL–016, DD–M–108, DD–M–122, DD–M–123, DD–M–126 & DD–M–145

DESIGNED	D. GLEN	2–01 DATE
DRAWN	W. MASSEY	2–01 DATE
CHECKED	W. TINKHAM	2–01 DATE
APPROVED	R. GANERIWAL	2–01 DATE

REFERENCE DRAWINGS

NUMBER	DESCRIPTION

REVISIONS

DATE	BY	DESCRIPTION
08/2001	SYSP	Revised and issued by the Authority

WASHINGTON METROPOLITAN AREA TRANSIT AUTHORITY

DEPARTMENT OF TRANSIT SYSTEM DEVELOPMENT
OFFICE OF SYSTEMS

SUBMITTED _____ DATE

APPROVED _____ DIRECTOR May 3, 2001 DATE

HYDRAULIC ELEVATOR INSTALLATIONS
ELEVATOR ELECTRICAL RACEWAY AREAS

SCALE: NONE

DRAWING NO.: ST–ELEV–002

NOTES:

1. GROUNDING DETAILS INDICATED ARE FOR A TYPICAL CIRCUIT CONFIGURATION AND MAY BE MODIFIED TO SUIT ACTUAL FIELD CONDITIONS PROVIDED THE INTENT OF GROUNDING REQUIREMENTS AS SHOWN AND SPECIFIED ARE MET.
2. BRANCH CIRCUIT INDICATED FOR ELEVATOR CAR IS TYPICAL & REPRESENTS GROUNDING REQUIREMENTS FOR THE EMERGENCY POWER SOURCE FROM THE STATION UNINTERRUPTIBLE POWER SYSTEM. OTHER BRANCH CIRCUIT(S) EXIST ON THE ELEVATOR CAR & ARE NOT SHOWN FOR CLARITY. RACEWAY TYPE USED ON THE CAR MAY VARY FROM TYPE SHOWN TO SUIT MANUFACTURER'S STANDARD.
3. ELECTRICAL EQUIPMENT SHALL BE PROVIDED WITH A MINIMUM OF TWO GROUND PATHS AS FOLLOWS:
   - GREEN INSULATED EQUIPMENT GROUNDING CONDUCTOR.
   - CONNECTION TO GROUNDED METALLIC STRUCTURE USING METALLIC FASTENERS, METALLIC CONDUIT AND/OR BONDING JUMPER.

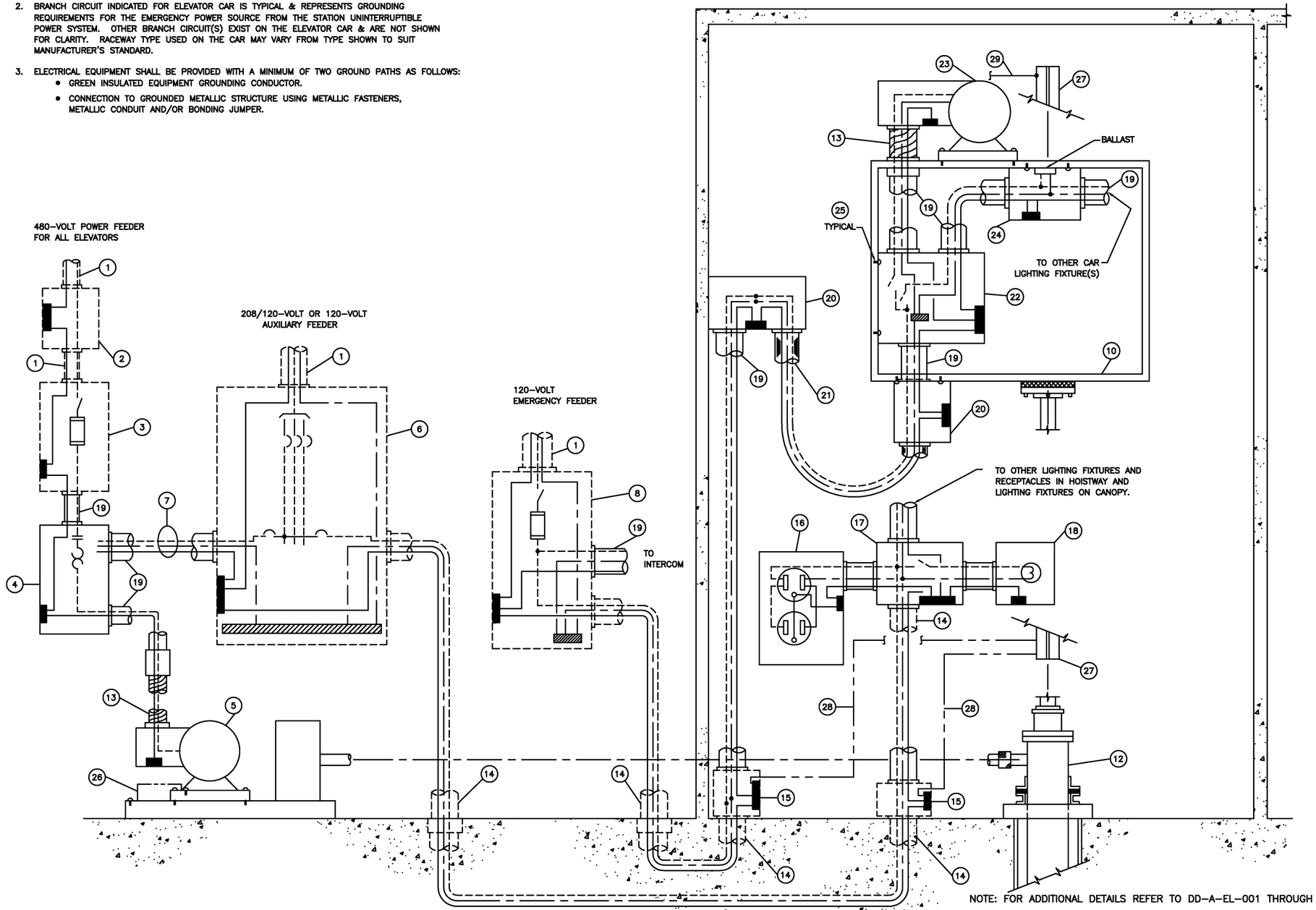

LEGEND

1. EXISTING CONDUIT & FEEDER.
2. EXISTING JUNCTION BOX AS APPLICABLE.
3. EXISTING 480V. , 3–POLE DISCONNECT DEVICE.
4. CONTROLLER FOR ELEVATOR DRIVE MOTOR.
5. HYDRAULIC ELEVATOR DRIVE UNIT CONSISTING OF ELECTRIC MOTOR & PUMP MOUNTED ON STEEL BASE.
6. EXISTING PANELBOARD, DISCONNECT SWITCH OR JUNCTION BOX.
7. BRANCH CIRCUIT FOR LIGHTED SIGNAL SYSTEM.
8. EXISTING 240V., 1–POLE DISCONNECT DEVICE. OR JUNCTION BOX
9. NOT USED.
10. ELEVATOR.
11. NOT USED.
12. HYDRAULIC CYLINDER & PISTON ELECTRICALLY INSULATED FROM GROUNDED METALLIC STRUCTURES & ELEVATOR CAR WITH INSULATING MATERIAL AS SHOWN TO FACILITATE CATHODIC PROTECTION.
13. MINIMUM 18" LONG LIQUID–TIGHT FLEXIBLE CONDUIT.
14. EXISTING CONDUIT & BRANCH CIRCUIT CONDUCTORS.
15. EXISTING JUNCTION BOX.
16. DUPLEX RECEPTACLE.
17. SWITCH.
18. LIGHT FIXTURE IN HOISTWAY.
19. GALVANIZED STEEL RIGID CONDUIT WITH DOUBLE LOCKNUTS AT EACH CONNECTION TO METALLIC ENCLOSURE.
20. JUNCTION BOX WITH TERMINAL BLOCKS FOR CONNECTION OF TRAVELING CABLE CONDUCTORS.
21. TRAVELING CABLE(S).
22. SERVICE CABINET.
23. VENTILATION FAN.
24. FLUORESCENT LIGHTING FIXTURE.
25. METALLIC FASTENER PROVIDING ELECTRICAL CONTINUITY BETWEEN METALLIC ENCLOSURE & METALLIC STRUCTURE.
26. BARE #8 AWG. MINIMUM BONDING JUMPER BETWEEN GROUNDED MOTOR FRAME & METALLIC FRAME OF ELEVATOR DRIVE UNIT.
27. CONTINUOUS STEEL GUIDE RAIL ATTACHED TO CONCRETE STRUCTURE &/OR STEEL FRAME OF HOISTWAY.
28. BARE #8 AWG. MINIMUM BONDING JUMPER BETWEEN GROUND STUD IN JUNCTION BOX & EACH STEEL GUIDE RAIL.
29. BARE #8 AWG. MINIMUM BONDING JUMPER BETWEEN EACH GUIDE RAIL & METALLIC FRAME & CLADDING INSTALLED ON EXTERIOR SIDE OF CONCRETE HOISTWAY STRUCTURE WHERE THIS TYPE CONSTRUCTION IS USED.

SYMBOLS

- PHASE CONDUCTOR(S).
- NEUTRAL CONDUCTOR
- EQUIPMENT GROUNDING CONDUCTOR.
- BONDING JUMPER.
- NEUTRAL BUS.
- GROUND BUS/STUD.
- CONNECTION OF CONDUCTORS.
- INSULATING MATERIAL.

NOTE: FOR ADDITIONAL DETAILS REFER TO DD–A–EL–001 THROUGH DD–A–EL–016, DD–M–108, DD–M–122, DD–M–123 & DD–M–126.

DESIGNED	D. GLEN	2–01 DATE
DRAWN	R. THOMAS, JR.	2–01 DATE
CHECKED	W. TINKHAM	2–01 DATE
APPROVED	R. GANERIWAL	2–01 DATE

REFERENCE DRAWINGS

NUMBER	DESCRIPTION

REVISIONS

DATE	BY	DESCRIPTION
08/2001	SYSP	Revised and issued by the Authority

WASHINGTON METROPOLITAN AREA TRANSIT AUTHORITY

DEPARTMENT OF TRANSIT SYSTEM DEVELOPMENT
OFFICE OF SYSTEMS

SUBMITTED _____ DATE

APPROVED _____ DIRECTOR May 3, 2001 DATE

HYDRAULIC ELEVATOR INSTALLATIONS
GROUNDING DIAGRAM

SCALE: NONE

DRAWING NO.: ST–ELEV–003

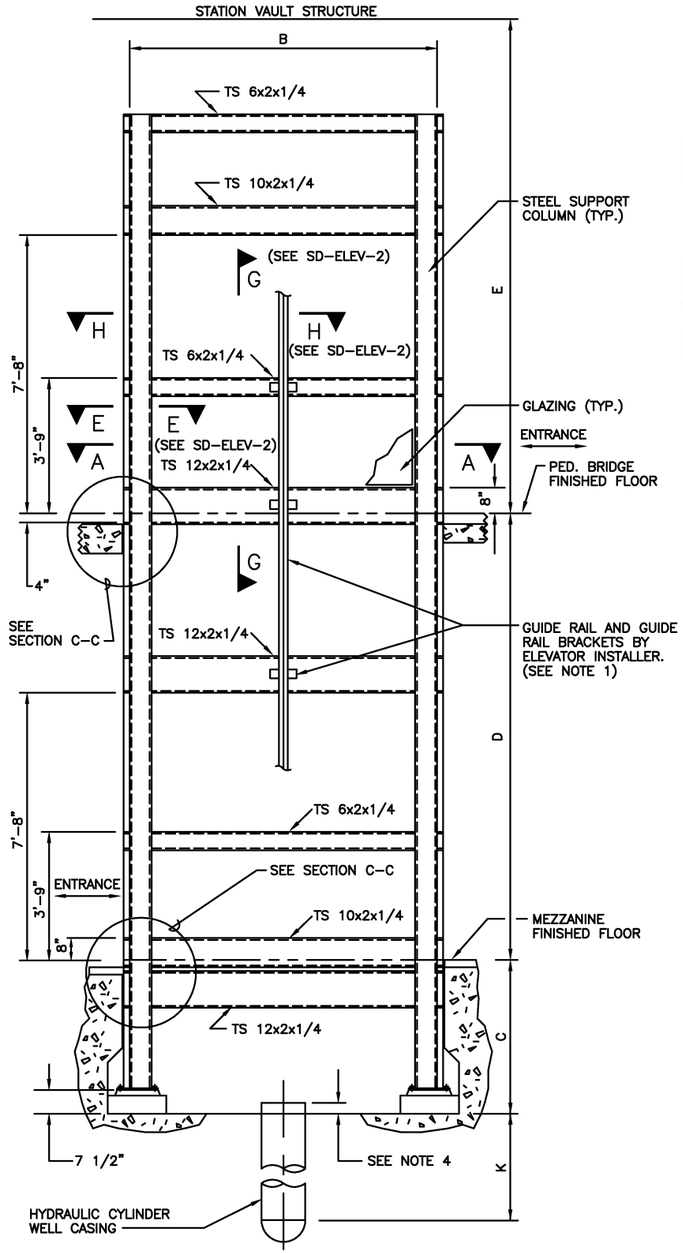

SECTION B–B
FRAME WORK

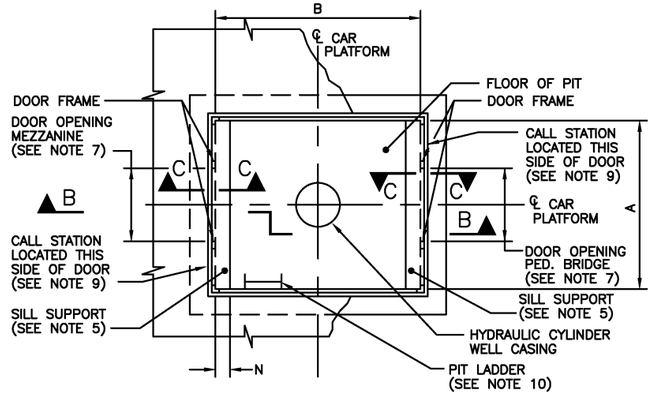

SECTION A–A
FRAMEWORK

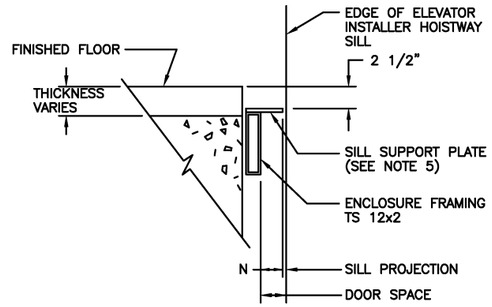

SECTION C–C
ROUGH SILL

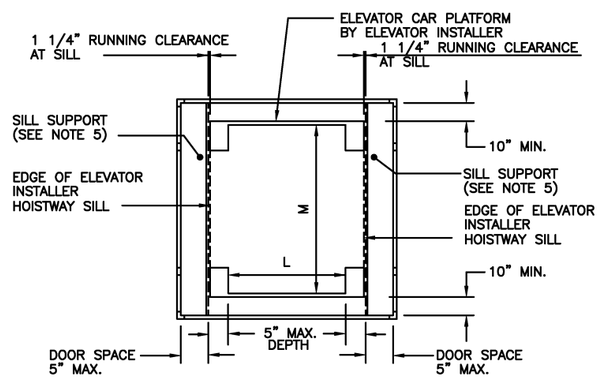

HOISTWAY/CAR INTERIOR DESIGN ALLOWANCES

NOTE: FOR ADDITIONAL DETAILS REFER TO DD-A-EL-001 THROUGH DD-A-EL-016, DD-M-108, DD-M-122, DD-M-123 & DD-M-126.

ELEVATOR NUMBER	SIDE WALL TO SIDE WALL OF HOISTWAY INTERIOR	FRONT WALL TO REAR WALL OF HOISTWAY INTERIOR	PIT DEPTH	RISE OF ELEVATOR	OVERHEAD CLEARANCE	MACHINE ROOM WIDTH	MACHINE ROOM LENGTH	MACHINE ROOM MIN. HEADRM.	DEPTH OF HYDRAULIC CYLINDER WELL CASING AND I.D. PIPE	INSIDE LENGTH (FRT. TO REAR) OF ELEVATOR CAR	INSIDE WIDTH (SIDE TO SIDE) OF ELEVATOR CAR	ROUGH SILL	MACHINE ROOM LOCATION A-ADJ. TO HOISTWAY B-REMOTE/PIPE RUN (FT.) (SEE NOTE 9)	NUMBER OF LANDINGS
	A	B	C	D	E				K	L MIN.	M MIN.	N		
AT GRADE STATION – GLASS/STEEL FRAME HOISTWAY – TWO DOORS)														
*	9'–1"	8'–5"	4'–0"	18'–0"	11'–9" MIN.	14'–2"	10'–2"	10'–3" MIN.	25'–0" / 20"	6'–2"	7'–0"	5"±	B / 60'–0"	2

* NUMBER ELEVATORS IN ACCORDANCE WITH THE FOLLOWING

00.0.0.0.0.0

COMPLETE ELEVATOR NUMBER

EXPLANATION OF ELEVATOR NUMBERING SYSTEM

00.0. STATION — 0.0.0.0 ELEVATOR NUMBER IN STATION

00 · 0 · 0 · 0 · 0 · 0

- 00 — STRUCTURAL CONTRACT SECTION
- 0 — STATION NUMBER WITHIN SECTION
- 0 — LANDINGS SERVICED
  - A–SURFACE/MEZZ.
  - B–MEZZ./PLATFORM
  - C–SURFACE/PLATFORM
  - D–SURFACE/MEZZ./PLATFORM
- 0 — ELEVATOR TYPE
- 0 — ELEVATOR SUBCLASSIFICATION
- 0 — SINGLE ELEVATOR NO.

ABBREVIATIONS

I.D	–	INSIDE DIAMETER
FRT.	–	FRONT
ADJ.	–	ADJACENT
MIN.	–	MINIMUM
MAX.	–	MAXIMUM
FT.	–	FOOT
HEADRM.	–	HEAD ROOM

NOTES:

1. GUIDE RAIL BRACKETS SHALL BE PROVIDED AT EVERY HORIZONTAL HOISTWAY STRUCTURAL MEMBER AND SHALL BE OF SUFFICIENT STRENGTH TO MEET ASME CODE.
2. ALL DIMENSIONS GIVEN ARE NOMINAL VALUES SUBJECT TO CONSTRUCTION TOLERANCES.
3. THIS DRAWING ILLUSTRATES HOISTWAY DESIGN DETAILS. REFER TO STATION DWGS. FOR CONSTRUCTION DETAILS OF HOISTWAY AND MACHINE ROOM LOCATIONS.
4. EXTENSION OF HYDRAULIC CYLINDER WELL CASING ABOVE FLOOR TO BE REMOVED BY ELEVATOR INSTALLER AS REQUIRED.
5. THE SILL SUPPORT PLATE IS TO BE PROVIDED BY THE ELEVATOR INSTALLER.
6. THE HOISTWAY SILL IS TO BE FURNISHED AND INSTALLED BY THE ELEVATOR INSTALLER.
7. LOCATION AND SIZE OF DOOR OPENING SHALL BE AS SHOWN ON STATION DRAWINGS,
8. CATHODIC PROTECTION OF HYDRAULIC CYLINDER PER DRAWING SD–ELEV–1 SHALL BE PROVIDED BY ELEVATOR INSTALLER.
9. THE HOISTWAY ENTRANCE CLADDING AND CUT–OUTS FOR ELEVATOR CONTROLS IN ENTRANCE CLADDING BY ELEVATOR INSTALLER. CORRDINATION WITH OTHER TRADES, IS REQUIRED.
10. THE PIT ACCESS LADDER AND GRAB BAR BY ELEVATOR INSTALLER.
11. THE OVERALL CAR (OUTSIDE TO OUTSIDE) SIZE IS 7'–4" x 7'–4".
12. ANY WATER OR DEBRIS IN THE HOISTWAY PIT OR IN THE CYLINDER CASING SHALL BE REMOVED BY THE ELEVATOR INSTALLER.

GENERAL NOTES:

1. NOMINAL VALUES OR VALUES FROM OTHER CONTRACTS USED BY WAY OF EXAMPLE. THE CONTRACTOR SHALL INSERT NAMES, LOCATIONS, VALUES AND DATA BASED ON THE DESIGN AND INSTALLATION FOR THIS PROJECT.
2. THIS DRAWING IS PROVIDED FOR ILLUSTRATION ONLY TO INDICATE TYPE AND APPEARANCE OF INFORMATION REQUIRED BY WMATA.

This Drawing Reflects a WMATA standard design approach. Project specific drawings must be developed by the Contractor which reflect this Design Philosophy

DESIGNED	R. PATEL	2–01 DATE
DRAWN	R. THOMAS, JR.	2–01 DATE
CHECKED	J. BUMANIS	2–01 DATE
APPROVED	R. GANERIWAL	2–01 DATE

REFERENCE DRAWINGS

NUMBER	DESCRIPTION

REVISIONS

DATE	BY	DESCRIPTION
08/2001	SYSP	Revised and issued by the Authority

WASHINGTON METROPOLITAN AREA TRANSIT AUTHORITY

DEPARTMENT OF TRANSIT SYSTEM DEVELOPMENT
OFFICE OF SYSTEMS

SUBMITTED _____ DATE

APPROVED _____ DIRECTOR May 3, 2001 DATE

HYDRAULIC ELEVATOR INSTALLATIONS AT GRADE STATION (MEZZANINE TO PED. BRIDGE)

SCALE: NOT TO SCALE

DRAWING NO. ST–ELEV–004

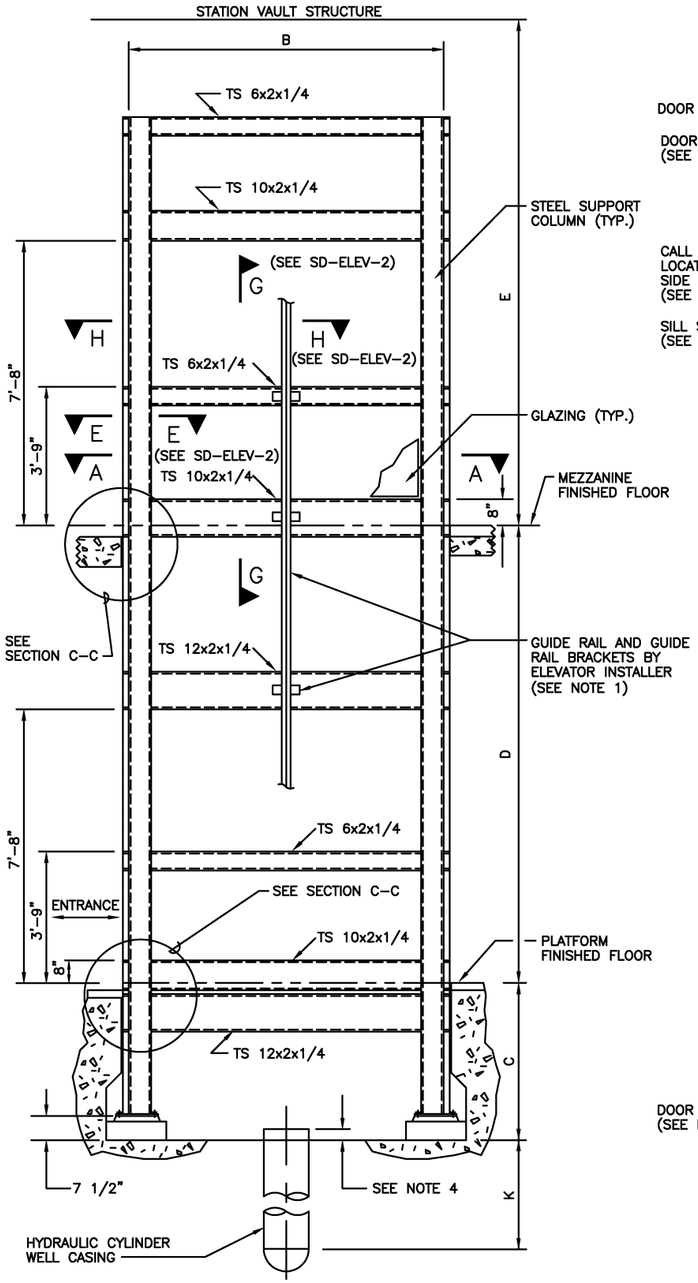

SECTION B–B
FRAME WORK

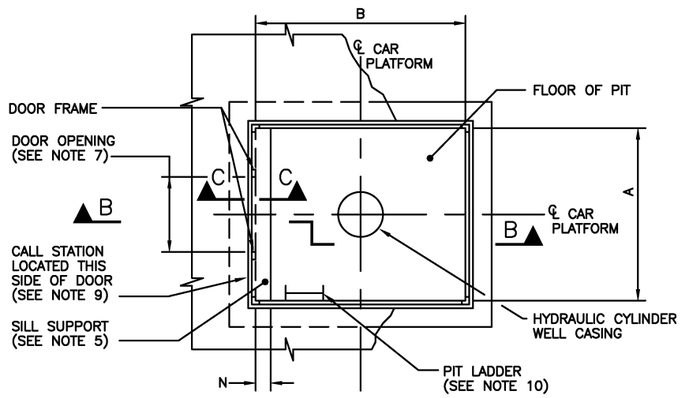

SECTION A–A
FRAMEWORK

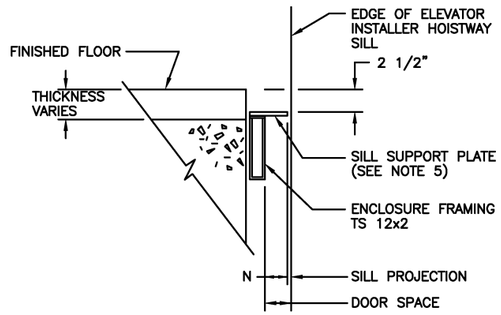

SECTION C–C
ROUGH SILL

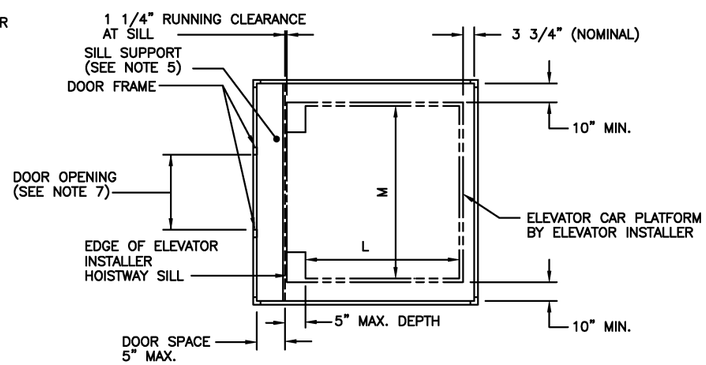

HOISTWAY/CAR INTERIOR DESIGN ALLOWANCES

ELEVATOR NUMBER	SIDE WALL TO SIDE WALL OF HOIST WAY INTERIOR	FRONT WALL TO REAR WALL OF HOIST WAY INTERIOR	PIT DEPTH	RISE OF ELEVATOR	OVERHEAD CLEARANCE	MACHINE ROOM WIDTH	MACHINE ROOM LENGTH	MACHINE ROOM MIN. HEADRM.	DEPTH OF HYDRAULIC CYLINDER WELL CASING AND I.D. PIPE	INSIDE LENGTH (FRT. TO REAR) OF ELEVATOR CAR	INSIDE WIDTH (SIDE TO SIDE) OF ELEVATOR CAR	ROUGH SILL	MACHINE ROOM LOCATION A–ADJ. TO HOIST WAY B–REMOTE/PIPE RUN (FT.)	NUMBER OF LANDINGS
	A	B	C	D	E				K	L MIN.	M MIN.	N		
AT GRADE STATION – (GLASS/STEEL FRAME HOISTWAY)														
*	9'–1/2"	8'–2–1/2"	4'–0"	18'–11"±	17'–4" MIN.	10'–3"	7'–4"	8'–0"	25'–10 3/4" – 20"	6'–5"	7'–0"	5"±	A	2

* NUMBER ELEVATORS IN ACCORDANCE WITH THE FOLLOWING

00.0.0.0.0.0

COMPLETE ELEVATOR NUMBER

EXPLANATION OF ELEVATOR NUMBERING SYSTEM

00.0. — STATION

0.0.0.0 — ELEVATOR NUMBER IN STATION

00 · 0 · 0 · 0 · 0 · 0

- 00 — STRUCTURAL CONTRACT SECTION
- 0 — STATION NUMBER WITHIN SECTION
- 0 — LANDINGS SERVICED
  - A–SURFACE/MEZZ.
  - B–MEZZ./PLATFORM
  - C–SURFACE/PLATFORM
  - D–SURFACE/MEZZ./PLATFORM
- 0 — ELEVATOR TYPE
- 0 — ELEVATOR SUBCLASSIFICATION
- 0 — SINGLE ELEVATOR NO.

ABBREVIATIONS

I.D	–	INSIDE DIAMETER
FRT.	–	FRONT
ADJ.	–	ADJACENT
MIN.	–	MINIMUM
MAX.	–	MAXIMUM
FT.	–	FOOT
HEADRM.	–	HEAD ROOM

NOTES:

1. GUIDE RAIL BRACKETS SHALL BE PROVIDED AT EVERY HORIZONTAL HOISTWAY STRUCTURAL MEMBER AND SHALL BE OF SUFFICIENT STRENGTH TO MEET ASME CODE.
2. ALL DIMENSIONS GIVEN ARE NOMINAL VALUES SUBJECT TO CONSTRUCTION TOLERANCES.
3. THIS DRAWING ILLUSTRATES HOISTWAY DESIGN DETAILS REFER TO STATION DWGS. FOR CONSTRUCTION DETAILS OF HOISTWAY AND MACHINE ROOM LOCATIONS.
4. EXTENSION OF HYDRAULIC CYLINDER WELL CASING ABOVE FLOOR TO BE REMOVED BY ELEVATOR INSTALLER AS REQUIRED.
5. THE SILL SUPPORT PLATE IS TO BE PROVIDED BY THE ELEVATOR INSTALLER.
6. THE HOISTWAY SILL IS TO BE FURNISHED AND INSTALLED BY THE ELEVATOR INSTALLER.
7. LOCATION AND SIZE OF DOOR OPENING SHALL BE AS SHOWN ON STATION DRAWINGS.
8. CATHODIC PROTECTION OF HYDRAULIC CYLINDER PER DRAWING SD–ELEV–1 SHALL BE PROVIDED BY ELEVATOR INSTALLER.
9. THE HOISTWAY ENTRANCE CLADDING AND CUT–OUTS FOR ELEVATOR CONTROLS IN ENTRANCE CLADDING BY ELEVATOR INSTALLER. CORRDINATION WITH OTHER TRADES, IS REQUIRED.
10. THE PIT ACCESS LADDER AND GRAB BAR BY ELEVATOR INSTALLER.
11. THE OVERALL CAR (OUTSIDE TO OUTSIDE) SIZE IS 7'–4" x 7'–4".
12. ANY WATER OR DEBRIS IN THE HOISTWAY PIT OR IN THE CYLINDER CASING SHALL BE REMOVED BY THE ELEVATOR INSTALLER.

GENERAL NOTES:

1. NOMINAL VALUES OR VALUES FROM OTHER CONTRACTS USED BY WAY OF EXAMPLE. THE CONTRACTOR SHALL INSERT NAMES, LOCATIONS, VALUES AND DATA BASED ON THE DESIGN AND INSTALLATION FOR THIS PROJECT.
2. THIS DRAWING IS PROVIDED FOR ILLUSTRATION ONLY TO INDICATE TYPE AND APPEARANCE OF INFORMATION REQUIRED BY WMATA.

This Drawing Reflects a WMATA standard design approach. Project specific drawings must be developed by the Contractor which reflect this Design Philosophy

NOTE: FOR ADDITIONAL DETAILS REFER TO DD–A–EL–001 THROUGH DD–A–EL–016, DD–M–108, DD–M–122, DD–M–123, DD–M–126 & DD–M–145

DESIGNED R. PATEL 2–01 DATE
DRAWN R. THOMAS, JR. 2–01 DATE
CHECKED J. BUMANIS 2–01 DATE
APPROVED R. GANERIWAL 2–01 DATE

REFERENCE DRAWINGS

NUMBER	DESCRIPTION

REVISIONS

DATE	BY	DESCRIPTION
08/2001	SYSP	Revised and issued by the Authority

WASHINGTON METROPOLITAN AREA TRANSIT AUTHORITY

DEPARTMENT OF TRANSIT SYSTEM DEVELOPMENT
OFFICE OF SYSTEMS

SUBMITTED _____ DATE

APPROVED _____ DIRECTOR May 3, 2001 DATE

HYDRAULIC ELEVATOR INSTALLATIONS
AT GRADE STATION
(MEZZANINE TO PLATFORM)

SCALE: NOT TO SCALE

DRAWING NO.: ST–ELEV–005

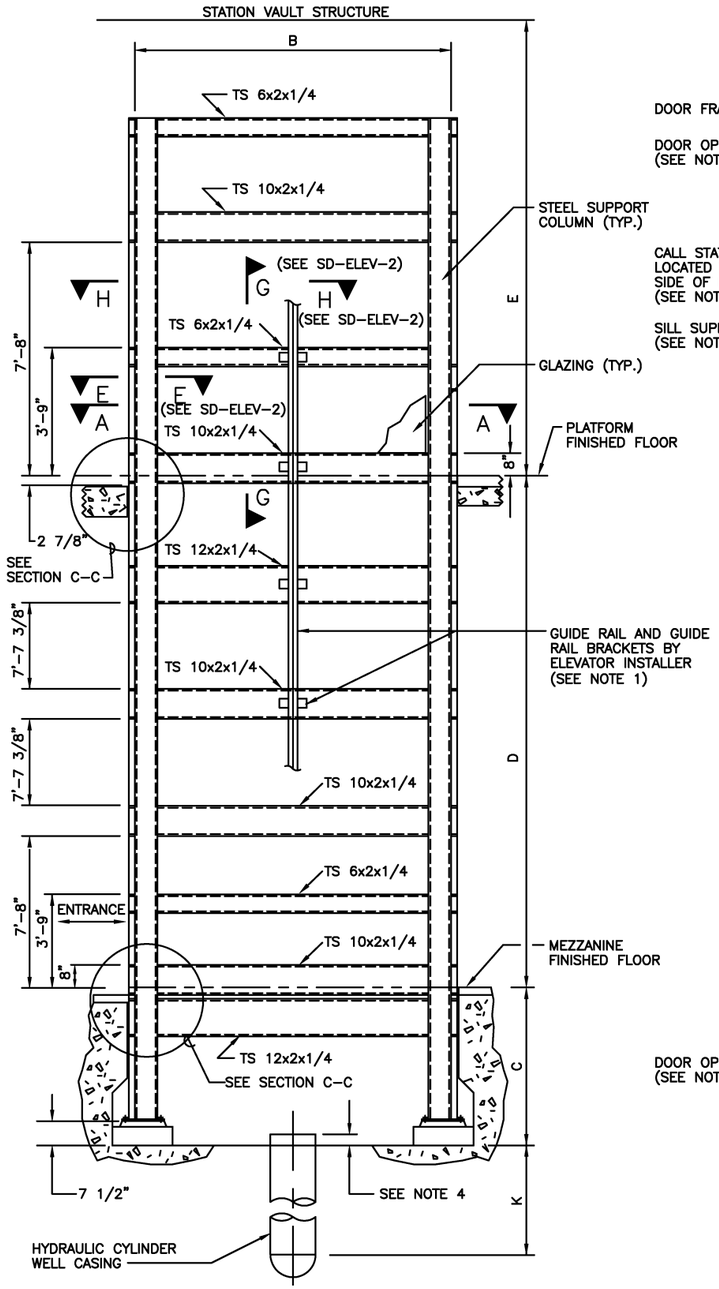

SECTION B–B
FRAME WORK

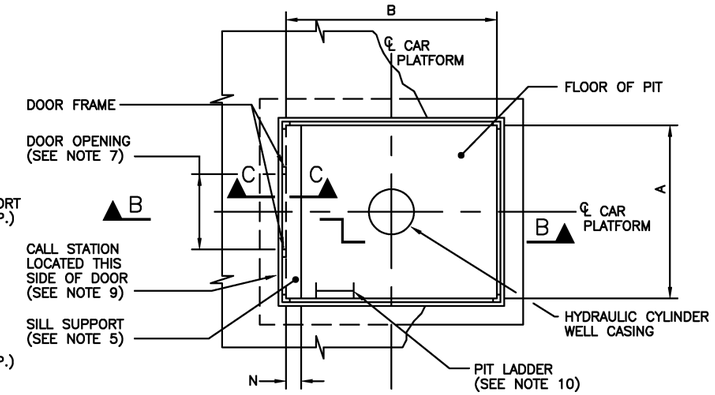

SECTION A–A
FRAMEWORK

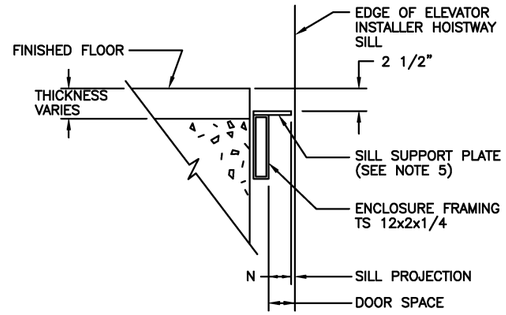

SECTION C–C
ROUGH SILL

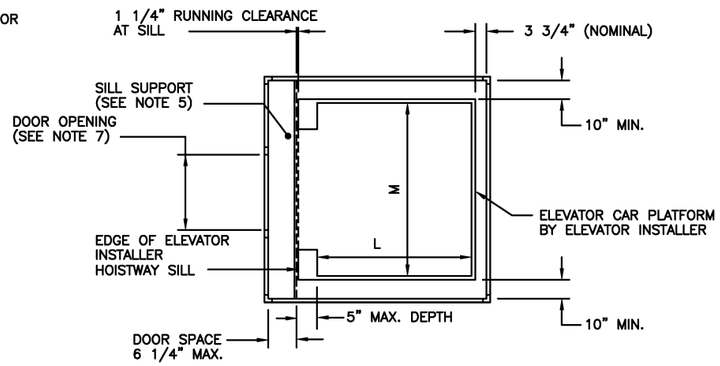

HOISTWAY/CAR INTERIOR DESIGN ALLOWANCES

ELEVATOR NUMBER	SIDE WALL TO SIDE WALL OF HOISTWAY INTERIOR	FRONT WALL TO REAR WALL OF HOISTWAY INTERIOR	PIT DEPTH	RISE OF ELEVATOR	OVERHEAD CLEARANCE (VARIABLE)	MACHINE ROOM WIDTH	MACHINE ROOM LENGTH	MACHINE ROOM HEADRM. (SEE NOTE 12)	DEPTH OF HYDRAULIC CYLINDER WELL CASING AND I.D. PIPE	INSIDE LENGTH (FRT. TO REAR) OF ELEVATOR CAR	INSIDE WIDTH (SIDE TO SIDE) OF ELEVATOR CAR	ROUGH SILL	MACHINE ROOM LOCATION A–ADJ. TO HOISTWAY B–REMOTE/PIPE RUN (FT.) (SEE NOTE 13)	NUMBER OF LANDINGS
	A	B	C	D	E				K	L MIN.	M MIN.	N		
AERIAL STATION – (GLASS/STEEL FRAME HOISTWAY)														
*	9'–4"	8'–2"	3'–8"	28'–2"±	11'–9" MIN.	9'–1"	14'–10"	14'–9"	35'–1" / 20"	6'–7"	7'–0"	5"±	B / 75'–0"	2

* NUMBER ELEVATORS IN ACCORDANCE WITH THE FOLLOWING

00.0.0.0.0.0

COMPLETE ELEVATOR NUMBER

EXPLANATION OF ELEVATOR NUMBERING SYSTEM

00.0. STATION

0.0.0.0 ELEVATOR NUMBER IN STATION

00 · 0 · 0 · 0 · 0 · 0

- 00 — STRUCTURAL CONTRACT SECTION
- 0 — STATION NUMBER WITHIN SECTION
- 0 — LANDINGS SERVICED
  - A–SURFACE/MEZZ.
  - B–MEZZ./PLATFORM
  - C–SURFACE/PLATFORM
  - D–SURFACE/MEZZ./PLATFORM
- 0 — ELEVATOR TYPE
- 0 — ELEVATOR SUBCLASSIFICATION
- 0 — SINGLE ELEVATOR NO.

ABBREVIATIONS

I.D.	– INSIDE DIAMETER
FRT.	– FRONT
ADJ.	– ADJACENT
MIN.	– MINIMUM
MAX.	– MAXIMUM
FT.	– FEET
HEADRM.	– HEAD ROOM

NOTES:

1. GUIDE RAIL BRACKETS SHALL BE PROVIDED AT EVERY HORIZONTAL HOISTWAY STRUCTURAL MEMBER AND SHALL BE OF SUFFICIENT STRENGTH TO MEET ASME CODE.
2. ALL DIMENSIONS GIVEN ARE NOMINAL VALUES SUBJECT TO CONSTRUCTION TOLERANCES,
3. THIS DRAWING ILLUSTRATES HOISTWAY DESIGN DETAILS. REFER TO STATION DWGS. FOR CONSTRUCTION DETAILS OF HOISTWAY AND MACHINE ROOM LOCATIONS.
4. EXTENSION OF HYDRAULIC CYLINDER WELL CASING ABOVE FLOOR TO BE REMOVED BY ELEVATOR INSTALLER AS REQUIRED.
5. THE SILL SUPPORT PLATE IS TO BE PROVIDED BY THE ELEVATOR INSTALLER.
6. THE HOISTWAY SILL IS TO BE FURNISHED AND INSTALLED BY THE ELEVATOR INSTALLER.
7. LOCATION AND SIZE OF DOOR OPENING SHALL BE AS SHOWN ON STATION DRAWINGS.
8. CATHODIC PROTECTION OF HYDRAULIC CYLINDER PER DRAWING SD–ELEV–1 SHALL BE PROVIDED BY ELEVATOR INSTALLER.
9. THE HOISTWAY ENTRANCE CLADDING AND CUT–OUTS FOR ELEVATOR CONTROLS IN ENTRANCE CLADDING BY ELEVATOR INSTALLER. COORDINATION REQUIRED WITH OTHER TRADES.
10. THE PIT ACCESS LADDER AND GRAB BAR BY ELEVATOR INSTALLER.
11. THE OVERALL CAR (OUTSIDE TO OUTSIDE) SIZE IS 7'–4" x 7'–4".
12. PART OF CEILING DEPRESSED FOR STAIRWELL ABOVE.
13. INDICATED LENGTHS FOR HYDRAULIC PIPE RUNS ARE APPROXIMATE VALUES.
14. ANY WATER OR DEBRIS IN THE HOISTWAY PIT OR IN THE CYLINDER CASING SHALL BE REMOVED BY THE ELEVATOR INSTALLER.

GENERAL NOTES:

1. NOMINAL VALUES OR VALUES FROM OTHER CONTRACTS USED BY WAY OF EXAMPLE. THE CONTRACTOR SHALL INSERT NAMES, LOCATIONS, VALUES AND DATA BASED ON THE DESIGN AND INSTALLATION FOR THIS PROJECT.
2. THIS DRAWING IS PROVIDED FOR ILLUSTRATION ONLY TO INDICATE TYPE AND APPEARANCE OF INFORMATION REQUIRED BY WMATA.

This Drawing Reflects a WMATA standard design approach. Project specific drawings must be developed by the Contractor which reflect this Design Philosophy

NOTE: FOR ADDITIONAL DETAILS REFER TO DD–A–EL–001 THROUGH DD–A–EL–016, DD–M–108, DD–M–122, DD–M–123 & DD–M–126.

DESIGNED R. PATEL 2–01 DATE
DRAWN R. THOMAS, JR. 2–01 DATE
CHECKED J. BUMANIS 2–01 DATE
APPROVED R. GANERIWAL 2–01 DATE

REFERENCE DRAWINGS

NUMBER	DESCRIPTION

REVISIONS

DATE	BY	DESCRIPTION
08/2001	SYSP	Revised and issued by the Authority

WASHINGTON METROPOLITAN AREA TRANSIT AUTHORITY

DEPARTMENT OF TRANSIT SYSTEM DEVELOPMENT
OFFICE OF SYSTEMS

SUBMITTED DATE

APPROVED DIRECTOR May 3, 2001 DATE

HYDRAULIC ELEVATOR INSTALLATIONS
AERIAL STATION (MEZZANINE TO PLATFORM)

SCALE NOT TO SCALE

DRAWING NO. ST–ELEV–006

PASSENGER STATION NAME & ESCALATOR NO.	480/277V,3ø,4W OR 480V,3ø,3W POWER FEEDER – RACEWAY & WIRE *								208/120V,3ø,4W AUXILIARY FEEDER – RACEWAY & WIRE *								120V,1ø,2W EMERGENCY FEEDER – RACEWAY & WIRE *							
	RACEWAY NO.	RACEWAY SIZE	FROM	TO	REF.DWG.NO. **	WIRE NO. & SIZE	SUPPLYING PNL.CKT.NO.	C.B–NO POLES & TRIP	RACEWAY NO.	RACEWAY SIZE	FROM	TO	REF.DWG.NO. **	WIRE NO. & SIZE	SUPPLYING PNL.CKT.NO.	C.B–NO POLES & TRIP	RACEWAY NO.	RACEWAY SIZE	FROM	TO	REF.DWG.NO. **	WIRE NO. & SIZE	SUPPLYING PNL.CKT.NO.	SW–No. POLES & FUSE RATING
UNDERGROUND																								
* SURFACE TO MEZZ.	054	1 1/4"	ESSENTIAL SWBD. S.A.C. RM.	DISC. SW. MAIN ELEV. MACH. RM.		3#4,1#8G	SOUTH ESS SWBD–9	3P–60A	43	1 1/4"	PANEL SESS S.A.C. RM.	PANEL PEL MAIN ELEV.MACH.RM.		4#8,1#10G	SESS–5,7,9	3P–40A	441	3/4"	PANEL MEEA S.MEZZ.ELECT.RM.	DISC. SW. MAIN ELEV.MACH.RM.		2#12,1#12G	MEEA–	1P–20A
												MEZZ												
* MEZZ. TO PLATFORM	055	1 1/2"	ESSENTIAL SWBD. S.A.C. RM.	DISC. SW. MEZZ. ELEV. MACH. RM.		3#8,1#10G	SOUTH ESS SWBD–10	3P–50A	49	1 1/4"	PANEL MESSA MEZZ.ELECT.RM.	PANEL MPEL ELEV.MACH.RM.		4#8,1#10G	MESSA–8,10, 12	3P–60A	443	1"	PANEL MEEA S.MEZZ.ELECT.RM.	DISC. SW. MEZZ. ELEV. MACH. RM.		2#12,1#12G	MEEA–7	1P–20A
AT GRADE																								
* MEZZ. TO PED. BRIDGE	423	2"	SWBD. ES–2 S.A.C. RM.	J.B. ENT. ELEV. MACH. RM.		3#4,1#4G	ES2–10	3P–150A set at .5	227	3/4"	PANEL MESS1 MEZZ.ELECT.RM.	J.B. ENT.ELEV.MACH.RM. SEE NOTE 3		4#10,1#10G	MESS1–7,9, 11	3P–30A	211	3/4"	PANEL EE A.C.SWBD.RM.	J.B. ENT.ELEV.MACH.RM. SEE NOTE 4		2#12,1#12G	EE–4	1P–20A
* MEZZ. TO PLATFORM	404/ F10	2"	SWBD. ES–1 S.A.C. RM.	DISC. SW. MEZZ. ELEV. MACH. RM.		3/C #4+GRD	ES1–9	3P–150A set .85	232	3/4"	PANEL AESS AC SWBD RM	J.B. MEZZ.ELEV.MACH.RM. SEE NOTE 3		4#10,1#10G	AESS–8,10,12	3P–30A	205	3/4"	PANEL EE A.C.SWBD.RM.	J.B. MEZZ.ELEV.MACH.RM. SEE NOTE 4		2#12,1#12G	EE–6	1P–20A
AERIAL																								
* MEZZ. TO PLATFORM	404	1 1/4"	SWBD. ES–1 A.C. SWBD. RM.	DISC. SW. ELEV. MACH. RM.		3#4, #10G	ES1–6	3P–150A set at .5	209	1"	PANEL MESS1 MEZZ.ELECT.RM.	DISC. SW. ELEV.MACH.RM. SEE NOTE 3		4#10,1#12G	MESS1–31,33 ,35	3P–30A	215	1"	PANEL EE A.C.SWBD.RM.	DISC. SW. ELEV. MACH. RM.		2#12,1#12G	EE–2	1P–20A
AT GRADE																								
* MEZZ. TO PLATFORM	P5/ MC18	3"	SWBD. SB1 A.C. SWBD. RM.	DISC. SW. ELEV. MACH. RM.		4/C#2, 1#8G	SB1–5	3P–100A	P116/ MC17	2"	PANEL SESS1 AC SWBD RM	DISC.SW/PANEL NEL ELEV.MACH.RM.		4/C#10, 1#10G	SESS1–30,32 ,34	3P–40	P96/ MC16	2"	PANEL SEE A.C.SWBD.RM.	DISC. SW. ELEV. MACH. RM.		2/C#10, 1#12G	SEE–2	1P–20A
* MEZZ. TO PED. BRIDGE	P40	1 1/2"	SWBD. SB2 A.C. SWBD. RM.	DISC. SW. ELEV. MACH. RM.		3#2, 1#8G	SB2–7	3P–100A	P41/ P102	1"	PANEL MESS ELEC.CAB.RM.	DISC.SW/PANEL SEL ELEV.MACH.RM.		4#10,1#10G	MESS–14,16 ,18	3P–30	P38	3/4"	PANEL SEE A.C.SWBD.RM.	DISC. SW. ELEV. MACH. RM.		2#12,1#12G	SEE–4	1P–20A
AT GRADE																								
* MEZZ. TO PLATFORM	404, 404A, 404B	1 1/4"	SWBD. ES2 A.C. SWBD. RM.	DISC. SW. ELEV. MACH. RM.		4#4,1#10G	ES2–5	3P–150A set at .5	205, 205A, 205B	3/4"	PANEL MESS2 AC SWBD RM	ELEV. PANEL ELEV.MACH.RM.		4#12,1#12G	MESS2–14,16 ,18	3P–20	217, 217A, 217B	3/4"	PANEL EE A.C.SWBD.RM.	DISC. SW. ELEV. MACH. RM.		2#12,1#12G	EE–2	1P–20A

* INFORMATION PROVIDED IS FOR ILLUSTRATION ONLY. PROVIDE DATA BASED ON ACTUAL INSTALLATIONS.

** CONTRACTOR/DESIGNER TO COMPLETE.

ABBREVIATIONS

A.C.	ALTERNATING CURRENT	MACH.	MACHINE
A	AMPERE	MEZZ.	MEZZANINE
C.B.	CIRCUIT BREAKER	NO.	NUMBER
CKT.	CIRCUIT	P	POLE
DISC. SW.	DISCONNECT SWITCH	PNL.	PANEL
DWG.	DRAWING	REF.	REFERENCE
ESC.	ESCALATOR	RM.	ROOM
ESS	ESSENTIAL	S.	SOUTH
G	GROUND	SWBD.	SWITCHBOARD
ø	PHASE	V	VOLT
J.B.	JUNCTION BOX	W	WIRE

NOTES:

1. RACEWAYS, CIRCUIT BREAKERS, FUSES, JUNCTION BOXES AND WIRING SHOWN ABOVE ARE EXISTING. ADDITIONAL RACEWAYS, WIRING AND OTHER ELECTRICAL EQUIPMENT SHALL BE INSTALLED AS REQUIRED IN THIS CONTRACT.
2. FURNISH & INSTALL 208/120 VOLTS, 3–PHASE 4–WIRE PANELBOARD.
3. FURNISH & INSTALL 240 VOLT DISCONNECT SWITCH.

GENERAL NOTES:

1. NOMINAL VALUES OR VALUES FROM OTHER CONTRACTS USED BY WAY OF EXAMPLE. THE CONTRACTOR SHALL INSERT NAMES, LOCATIONS, VALUES AND DATA BASED ON THE DESIGN AND INSTALLATION FOR THIS PROJECT.
2. THIS DRAWING IS PROVIDED FOR ILLUSTRATION ONLY TO INDICATE TYPE AND APPEARANCE OF INFORMATION REQUIRED BY WMATA.

NOTE: FOR ADDITIONAL DETAILS REFER TO DD–A–EL–001 THROUGH DD–A–EL–016, DD–M–108, DD–M–122, DD–M–123 & DD–M–126.

This Drawing Reflects a WMATA standard design approach. Project specific drawings must be developed by the Contractor which reflect this Design Philosophy

DESIGNED D. GLEN 2–01 DATE

DRAWN R. THOMAS, JR. 2–01 DATE

CHECKED W. TINKHAM 2–01 DATE

APPROVED R. GANERIWAL 2–01 DATE

REFERENCE DRAWINGS

NUMBER	DESCRIPTION

REVISIONS

DATE	BY	DESCRIPTION
08/2001	SYSP	Revised and issued by the Authority

WASHINGTON METROPOLITAN AREA TRANSIT AUTHORITY

DEPARTMENT OF TRANSIT SYSTEM DEVELOPMENT
OFFICE OF SYSTEMS

SUBMITTED _____ DATE

APPROVED DIRECTOR _____ May 3, 2001 DATE

HYDRAULIC ELEVATOR INSTALLATIONS

FEEDER SCHEDULE

SCALE NONE

DRAWING NO. ST–ELEV–007

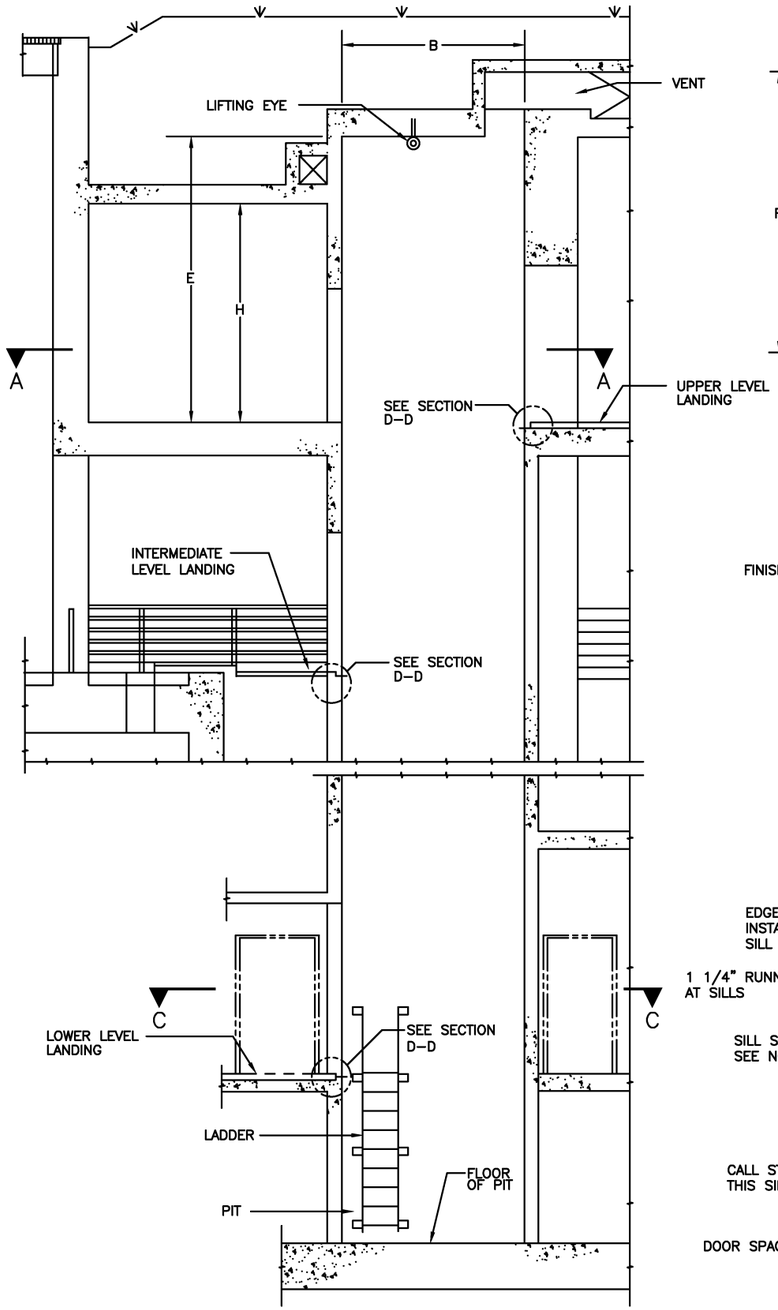

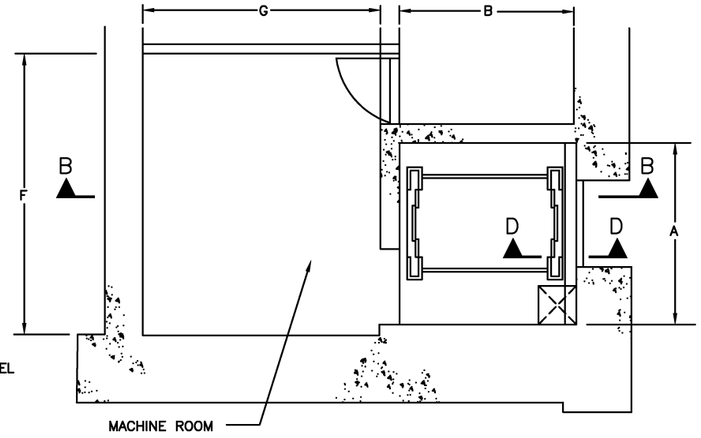

SECTION A–A

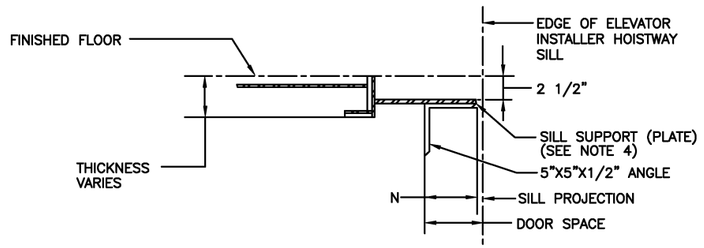

SECTION D–D

ROUGH SILL

SCALE: 1/2"=1'–0"

SECTION B–B

NOTE: FOR ADDITIONAL DETAILS REFER TO DD–A–EL–001 THROUGH DD–A–EL–016 & DD–M–145

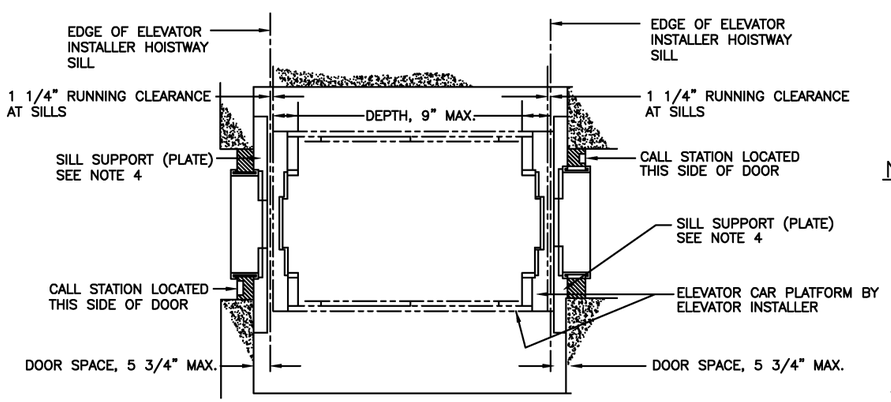

HOISTWAY/CAR INTERIOR DESIGN ALLOWANCES

N.T.S.

ELEVATOR NUMBER	SIDE WALL TO SIDE WALL OF HOISTWAY/PIT INTERIOR	FRONT WALL TO REAR WALL OF HOISTWAY	PIT DEPTH	RISE OF ELEVATOR	OVERHEAD CLEARANCE ALLOWANCE (MIN)	MACHINE ROOM WIDTH	MACHINE ROOM LENGTH	MACHINE ROOM MIN. HEADRM.	DEPTH OF HYDRAULIC CYLINDER WELL CASING AND I.D. PIPE	INSIDE LENGTH (FRT. TO REAR) OF ELEVATOR CAR	INSIDE WIDTH (SIDE TO SIDE) OF ELEVATOR CAR	ROUGH SILL	MACHINE ROOM LOCATION A–ADJ. TO HOISTWAY B–REMOTE/PIPE RUN (FT.)	NUMBER OF LANDINGS
	A	B	C	D	E	F	G	H		L MIN.	M MIN.	N		
UNDERGROUND STATION														
*	9'–4"	9'–6"	9'–0"	113'–10 1/2"	15'–0"	14'–0 5/8"	12'–6"	11'–6"		6'–10"	5'–3"	5"	A	6

* NUMBER ELEVATORS IN ACCORDANCE WITH THE FOLLOWING

00.0.0.0.0.0

COMPLETE ELEVATOR NUMBER

EXPLANATION OF ELEVATOR NUMBERING SYSTEM

00.0. STATION

0.0.0.0 ELEVATOR NUMBER IN STATION

00 · 0 · 0 · 0 · 0 · 0

- 00 — STRUCTURAL CONTRACT SECTION
- 0 — STATION NUMBER WITHIN SECTION
- 0 — LANDINGS SERVICED
  - A–SURFACE/MEZZ.
  - B–MEZZ./PLATFORM
  - C–SURFACE/PLATFORM
  - D–SURFACE/MEZZ./PLATFORM
- 0 — ELEVATOR TYPE
- 0 — ELEVATOR SUBCLASSIFICATION
- 0 — SINGLE ELEVATOR NO.

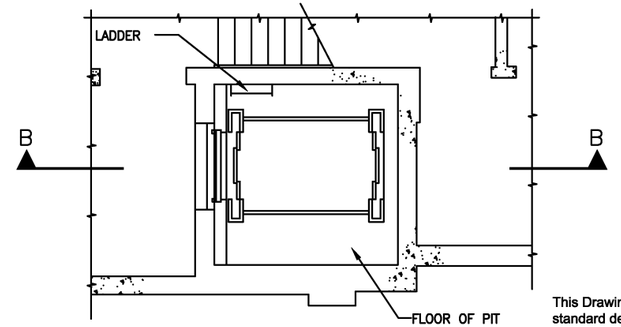

SECTION C–C

This Drawing Reflects a WMATA standard design approach. Project specific drawings must be developed by the Contractor which reflect this Design Philosophy

NOTES:

1. ENTRANCE WALLS AND FINISHED FLOORS ADJACENT TO THE ENTRANCE WILL NOT BE CONSTRUCTED UNTIL INSTALLER'S DOOR FRAME, SILL, AND CALL STATION ARE SET.
2. ALL DIMENSIONS GIVEN ARE NOMINAL VALUES SUBJECT TO CONSTRUCTION TOLERANCES.
3. THIS DRAWING ILLUSTRATES THE HOISTWAY AND MACHINE ROOM DESIGN CHARACTERISTICS. FOR CONSTRUCTION DETAILS OF HOISTWAY AND MACHINE ROOM.
4. THE SILL SUPPORT (PLATE) IS TO BE PROVIDED BY THE ELEVATOR INSTALLER.
5. UPPER, INTERMEDIATE (4 LEVELS) AND LOWER LEVEL LANDING ROUGH SILL MAY BE AS SHOWN OR MAY BE CONCRETE
6. THE HOISTWAY SILL IS TO BE FURNISHED AND INSTALLED BY THE ELEVATOR INSTALLER.
7. LOCATION AND SIZE OF DOOR OPENINGS SHALL BE AS SHOWN ON STATION DRAWINGS.

GENERAL NOTES:

1. NOMINAL VALUES OR VALUES FROM OTHER CONTRACTS USED BY WAY OF EXAMPLE. THE CONTRACTOR SHALL INSERT NAMES, LOCATIONS, VALUES AND DATA BASED ON THE DESIGN AND INSTALLATION FOR THIS PROJECT.
2. THIS DRAWING IS PROVIDED FOR ILLUSTRATION ONLY TO INDICATE TYPE AND APPEARANCE OF INFORMATION REQUIRED BY WMATA.

DESIGNED K. MAYNARD 2–01 DATE
DRAWN K. MAYNARD 2–01 DATE
CHECKED J. BUMANIS 2–01 DATE
APPROVED R. GANERIWAL 2–01 DATE

REFERENCE DRAWINGS

NUMBER	DESCRIPTION

REVISIONS

DATE	BY	DESCRIPTION
08/2001	SYSP	Revised and issued by the Authority

WASHINGTON METROPOLITAN AREA TRANSIT AUTHORITY

DEPARTMENT OF TRANSIT SYSTEM DEVELOPMENT
OFFICE OF SYSTEMS

SUBMITTED DATE

APPROVED DIRECTOR May 3, 2001 DATE

ELECTRIC ELEVATOR INSTALLATIONS
ELEVATOR PLAN AND SECTIONS

SCALE 1/4" = 1'–0"

DRAWING NO. ST–ELEV–008

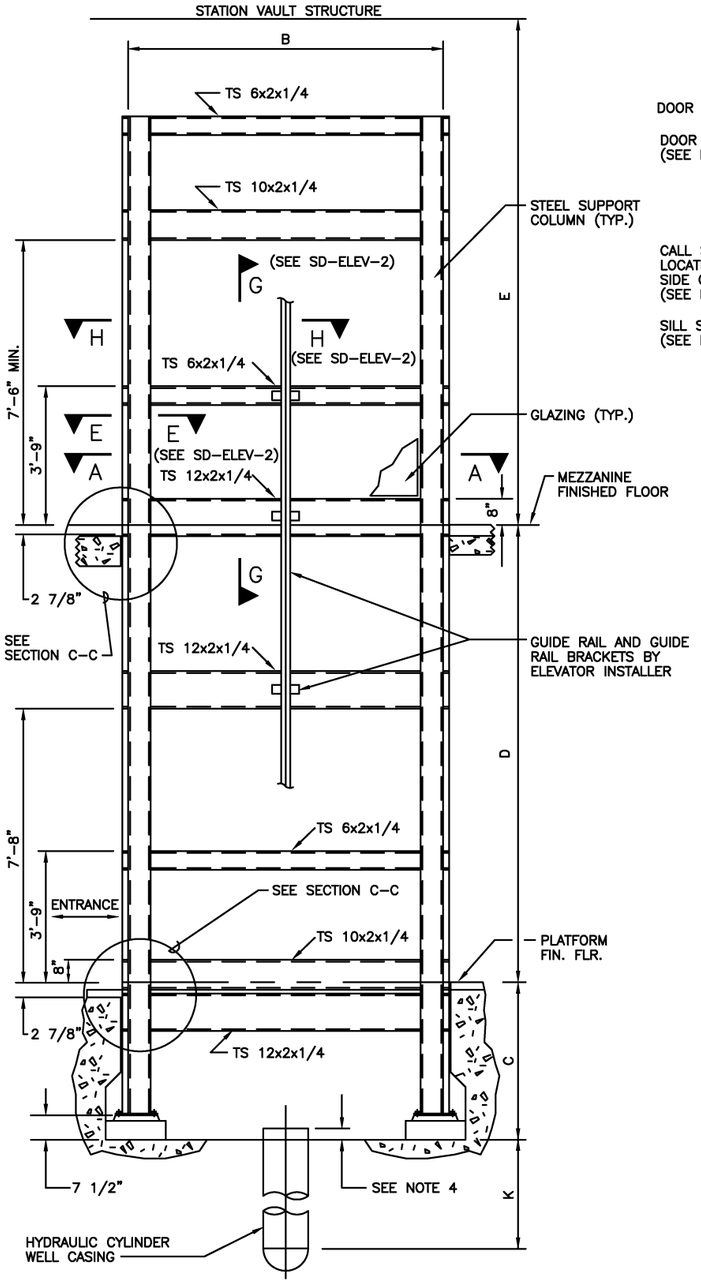

SECTION B–B
FRAME WORK

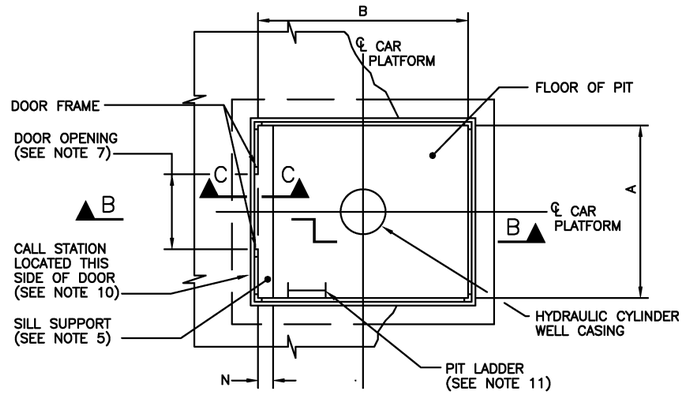

SECTION A–A
FRAMEWORK

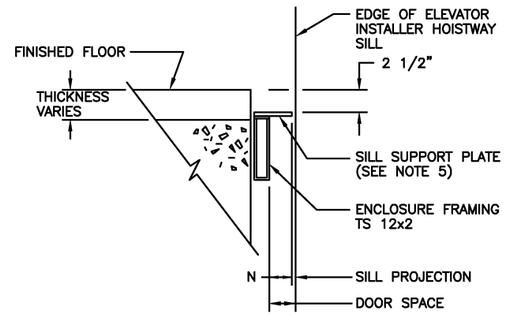

SECTION C–C
ROUGH SILL

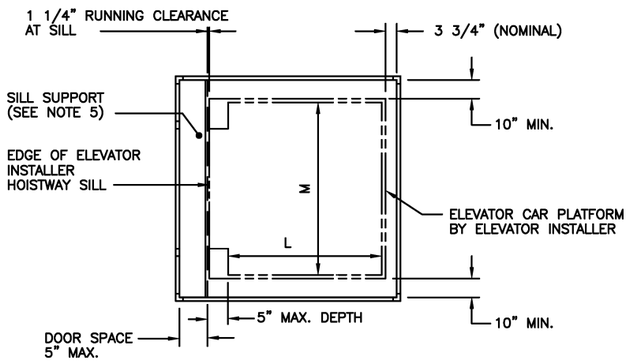

HOISTWAY/CAR INTERIOR DESIGN ALLOWANCES

ELEVATOR NUMBER	SIDE WALL TO SIDE WALL OF HOISTWAY INTERIOR	FRONT WALL TO REAR WALL OF HOISTWAY	PIT DEPTH	RISE OF ELEVATOR	OVERHEAD CLEARANCE (VARIABLE)	MACHINE ROOM WIDTH	MACHINE ROOM LENGTH	MACHINE ROOM MIN. HEADRM.	DEPTH OF HYDRAULIC CYLINDER WELL CASING AND I.D. PIPE	INSIDE LENGTH (FRT. TO REAR) OF ELEVATOR CAR	INSIDE WIDTH (SIDE TO SIDE) OF ELEVATOR CAR	ROUGH SILL	MACHINE ROOM LOCATION A–ADJ. TO HOISTWAY B–REMOTE/PIPE RUN (FT.) (9)	NUMBER OF LANDINGS
	A	B	C	D	E				K	L MIN.	M MIN.	N		
UNDERGROUND STATION														
*	9'–0"	8'–2"	4'–0"	12'–4"	14'–4 1/2"±	8'–9"	12'–2"	8'–0"	19'–3" / 20"	6'–7"	7'–0"	5"±	3A – B / 10	2

* NUMBER ELEVATORS IN ACCORDANCE WITH THE FOLLOWING

00.0.0.0.0.0

COMPLETE ELEVATOR NUMBER

EXPLANATION OF ELEVATOR NUMBERING SYSTEM

00.0. STATION — 0.0.0.0 ELEVATOR NUMBER IN STATION

00 · 0 · 0 · 0 · 0 · 0

- 00 — STRUCTURAL CONTRACT SECTION
- 0 — STATION NUMBER WITHIN SECTION
- 0 — LANDINGS SERVICED
  - A–SURFACE/MEZZ.
  - B–MEZZ./PLATFORM
  - C–SURFACE/PLATFORM
  - D–SURFACE/MEZZ./PLATFORM
- 0 — ELEVATOR TYPE
- 0 — ELEVATOR SUBCLASSIFICATION
- 0 — SINGLE ELEVATOR NO.

ABBREVIATIONS

I.D	–	INSIDE DIAMETER
FRT.	–	FRONT
ADJ.	–	ADJACENT
MIN.	–	MINIMUM
MAX.	–	MAXIMUM
FT.	–	FOOT
HEADRM.	–	HEAD ROOM

NOTES:

1. GUIDE RAIL BRACKETS SHALL BE PROVIDED AT EVERY HORIZONTAL HOISTWAY STRUCTURAL MEMBER AND SHALL BE OF SUFFICIENT STRENGTH TO MEET ASME CODE.
2. ALL DIMENSIONS GIVEN ARE NOMINAL VALUES SUBJECT TO CONSTRUCTION TOLERANCES.
3. THIS DRAWING ILLUSTRATES HOISTWAY DESIGN DETAILS. FOR CONSTRUCTION DETAILS OF HOISTWAY AND MACHINE ROOM LOCATIONS.
4. EXTENSION OF HYDRAULIC CYLINDER WELL CASING ABOVE FLOOR OF PIT TO BE REMOVED BY ELEVATOR INSTALLER WHERE REQUIRED.
5. THE SILL SUPPORT PLATE IS TO BE PROVIDED BY THE ELEVATOR INSTALLER.
6. THE HOISTWAY SILL IS TO BE FURNISHED AND INSTALLED BY THE ELEVATOR INSTALLER.
7. LOCATION AND SIZE OF DOOR OPENING SHALL BE AS SHOWN ON STATION DRAWINGS.
8. CATHODIC PROTECTION OF HYDRAULIC CYLINDER PER DRAWING SD–ELEV–1 SHALL BE PROVIDED BY ELEVATOR INSTALLER.
9. INDICATED LENGTHS FOR HYDRAULIC PIPE RUNS ARE APPROXIMATE VALUES.
10. THE HOISTWAY ENTRANCE CLADDING AND CUT–OUTS FOR ELEVATOR CONTROLS IN ENTRANCE CLADDING BY ELEVATOR INSTALLER. CORRDINATION WITH OTHER TRADES, IS REQUIRED.
11. THE PIT ACCESS LADDER AND GRAB BAR BY ELEVATOR INSTALLER.
12. THE OVERALL CAR (OUTSIDE TO OUTSIDE) SIZE IS 7'–4" x 7'–4".

GENERAL NOTES:

1. NOMINAL VALUES OR VALUES FROM OTHER CONTRACTS USED BY WAY OF EXAMPLE. THE CONTRACTOR SHALL INSERT NAMES, LOCATIONS, VALUES AND DATA BASED ON THE DESIGN AND INSTALLATION FOR THIS PROJECT.
2. THIS DRAWING IS PROVIDED FOR ILLUSTRATION ONLY TO INDICATE TYPE AND APPEARANCE OF INFORMATION REQUIRED BY WMATA.

NOTE: FOR ADDITIONAL DETAILS REFER TO DD–A–EL–001 THROUGH DD–A–EL–016, DD–M–108, DD–M–122, DD–M–123 & DD–M–126.

R. PATEL 2–01

DESIGNED L. POWELL 2–01 DATE
DRAWN J. BUMANIS 2–01 DATE
CHECKED R. GANERIWAL 2–01 DATE
APPROVED ____ DATE

REFERENCE DRAWINGS

NUMBER	DESCRIPTION

REVISIONS

DATE	BY	DESCRIPTION
08/2001	SYSP	Revised and issued by the Authority

WASHINGTON METROPOLITAN AREA TRANSIT AUTHORITY

DEPARTMENT OF TRANSIT SYSTEM DEVELOPMENT
OFFICE OF SYSTEMS

SUBMITTED ____ DATE

APPROVED DIRECTOR May 3, 2001 DATE

HYDRAULIC ELEVATOR INSTALLATIONS
ELEVATOR PLANS AND SECTIONS–PLATFORM
(GLASS/STEEL FRAME HOISTWAY)

SCALE NOT TO SCALE

DRAWING NO. ST–ELEV–009

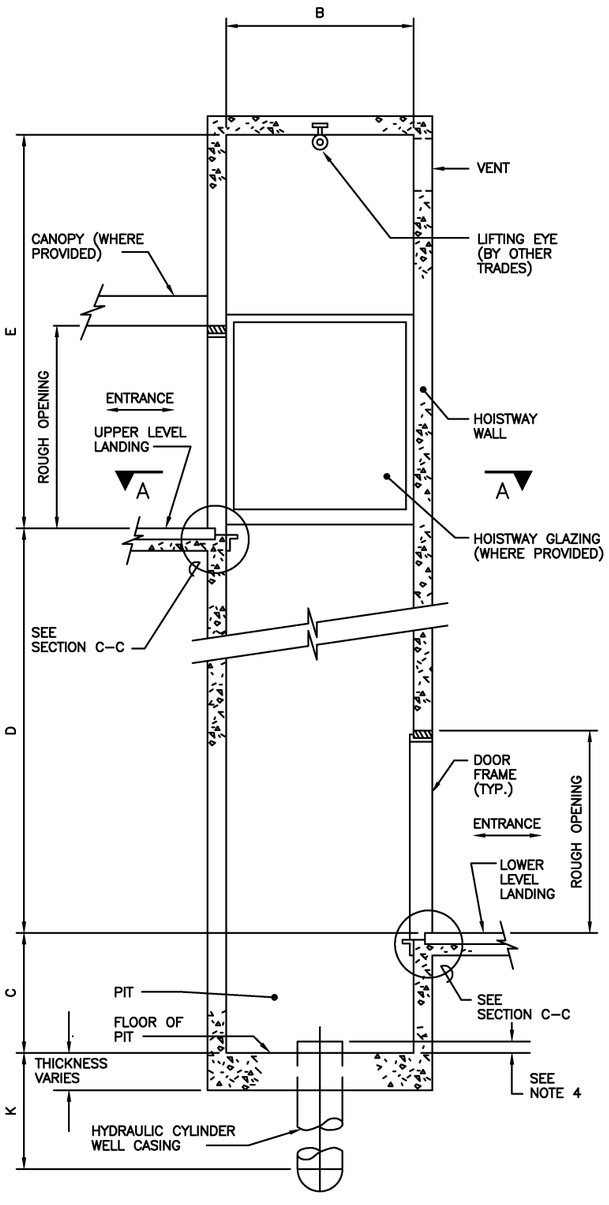

SECTION B–B

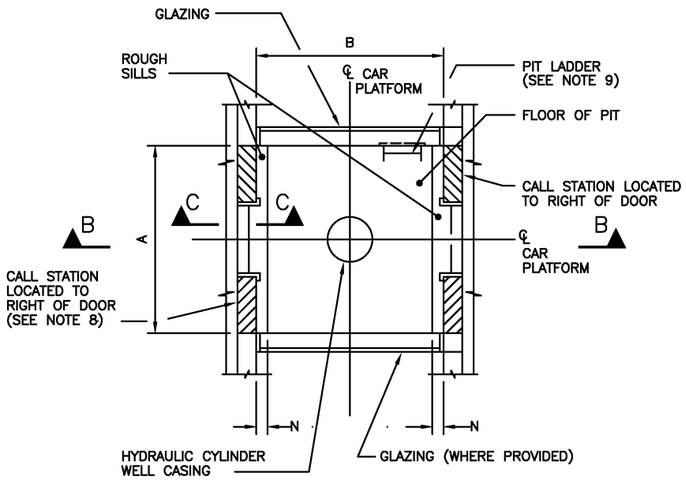

SECTION A–A

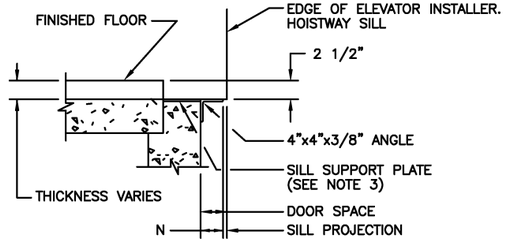

SECTION C–C : ROUGH SILL

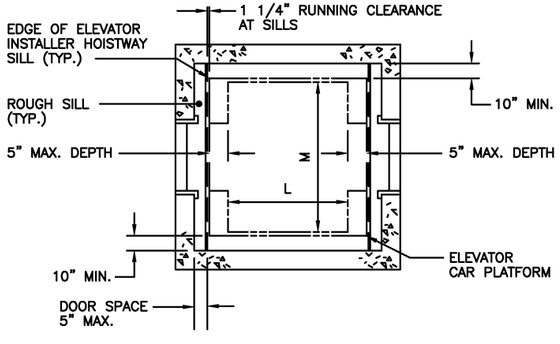

HOISTWAY/CAR INTERIOR DESIGN ALLOWANCES

ELEVATOR NUMBER	SIDE WALL TO SIDE WALL OF HOISTWAY INTERIOR	FRONT WALL TO REAR WALL OF HOISTWAY INTERIOR	PIT DEPTH	RISE OF ELEVATOR	OVERHEAD CLEARANCE	MACHINE ROOM WIDTH	MACHINE ROOM LENGTH	MACHINE ROOM MIN. HEADRM.	DEPTH OF HYDRAULIC CYLINDER WELL CASING AND I.D. PIPE	INSIDE LENGTH (FRT. TO REAR) OF ELEVATOR CAR	INSIDE WIDTH (SIDE TO SIDE) OF ELEVATOR CAR	ROUGH SILL	MACHINE ROOM LOCATION A–ADJ. TO HOISTWAY B–REMOTE/PIPE RUN (FT.)	NUMBER OF LANDINGS
	A	B	C	D	E				K	L MIN.	M MIN.	N		
UNDERGROUND STATION														
*	9'–0"	8'–2"	4'–0"	26'–3 9/16"	12'–3"	13'–10 1/2"	10'–3"	9'–6"	33'–4" / 20°	6'–2"	7'–0"	5"±	A	2

* NUMBER ELEVATORS IN ACCORDANCE WITH THE FOLLOWING

00.0.0.0.0.0

COMPLETE ELEVATOR NUMBER

EXPLANATION OF ELEVATOR NUMBERING SYSTEM

00.0. STATION

0.0.0.0 ELEVATOR NUMBER IN STATION

00 · 0 · 0 · 0 · 0 · 0

- 00 — STRUCTURAL CONTRACT SECTION
- 0 — STATION NUMBER WITHIN SECTION
- 0 — LANDINGS SERVICED
  - A–SURFACE/MEZZ.
  - B–MEZZ./PLATFORM
  - C–SURFACE/PLATFORM
  - D–SURFACE/MEZZ./PLATFORM
- 0 — ELEVATOR TYPE
- 0 — ELEVATOR SUBCLASSIFICATION
- 0 — SINGLE ELEVATOR NO.

ABBREVIATIONS

I.D	–	INSIDE DIAMETER
FRT.	–	FRONT
ADJ.	–	ADJACENT
MIN.	–	MINIMUM
MAX.	–	MAXIMUM
FT.	–	FOOT
HEADRM.	–	HEAD ROOM

NOTES:

1. ALL DIMENSIONS GIVEN ARE NOMINAL VALUES SUBJECT TO CONSTRUCTION TOLERANCES.
2. THIS DRAWING ILLUSTRATES HOISTWAY DESIGN DETAILS. REFER TO STATION DWGS. FOR CONSTRUCTION DETAILS OF HOISTWAY AND MACHINE ROOM LOCATIONS.
3. THE SILL SUPPORT PLATE IS TO BE PROVIDED BY THE ELEVATOR INSTALLER.
4. EXTENSION OF HYDRAULIC CYLINDER WELL CASING ABOVE FLOOR OF PIT TO BE REMOVED BY ELEVATOR INSTALLER WHERE REQUIRED.
5. CATHODIC PROTECTION OF HYDRAULIC CYLINDER PER DRAWING SD–ELEV–1 SHALL BE PROVIDED BY THE ELEVATOR INSTALLER.
6. LOCATION AND SIZE OF DOOR OPENINGS SHALL BE AS SHOWN ON STATION DRAWINGS.
7. THE HOISTWAY SILL IS TO BE FURNISHED AND INSTALLED BY THE ELEVATOR INSTALLER.
8. THE HOISTWAY ENTRANCE CLADDING AND CUT–OUTS FOR ELEVATOR CONTROLS IN ENTRANCE CLADDING BY ELEVATOR INSTALLER, EXCEPT FOR CUT–OUTS IN EXTRUDED BRONZE CLADDING ON CONCRETE HOISTWAY AT STREET LEVEL WHICH ARE PROVIDED BY OTHER TRADES, COORDINATION WITH OTHER TRADES IS REQUIRED.
9. THE PIT ACCESS LADDER AND GRAB BAR BY ELEVATOR INSTALLER.
10. THE OVERALL CAR (OUTSIDE TO OUTSIDE) SIZE IS 7'–4" x 7'–4".

GENERAL NOTES:

1. NOMINAL VALUES OR VALUES FROM OTHER CONTRACTS USED BY WAY OF EXAMPLE. THE CONTRACTOR SHALL INSERT NAMES, LOCATIONS, VALUES AND DATA BASED ON THE DESIGN AND INSTALLATION FOR THIS PROJECT.
2. THIS DRAWING IS PROVIDED FOR ILLUSTRATION ONLY TO INDICATE TYPE AND APPEARANCE OF INFORMATION REQUIRED BY WMATA.

NOTE: FOR ADDITIONAL DETAILS REFER TO DD–A–EL–001 THROUGH DD–A–EL–016, DD–M–108, DD–M–122, DD–M–123 & DD–M–126.

DESIGNED K. PATEL 2–01 DATE
DRAWN I. POWELL 2–01 DATE
CHECKED J. RUMANIS 2–01 DATE
APPROVED R. GANERIWAL 2–01 DATE

REFERENCE DRAWINGS

NUMBER	DESCRIPTION

REVISIONS

DATE	BY	DESCRIPTION
08/2001	SYSP	Revised and issued by the Authority

WASHINGTON METROPOLITAN AREA TRANSIT AUTHORITY

DEPARTMENT OF TRANSIT SYSTEM DEVELOPMENT
OFFICE OF SYSTEMS

SUBMITTED DATE

APPROVED DIRECTOR May 3, 2001 DATE

HYDRAULIC ELEVATOR INSTALLATIONS
ELEVATOR PLANS AND SECTIONS–SURFACE
(CONCRETE HOISTWAY – SINGE DOOR)

SCALE NOT TO SCALE

DRAWING NO. ST–ELEV–010

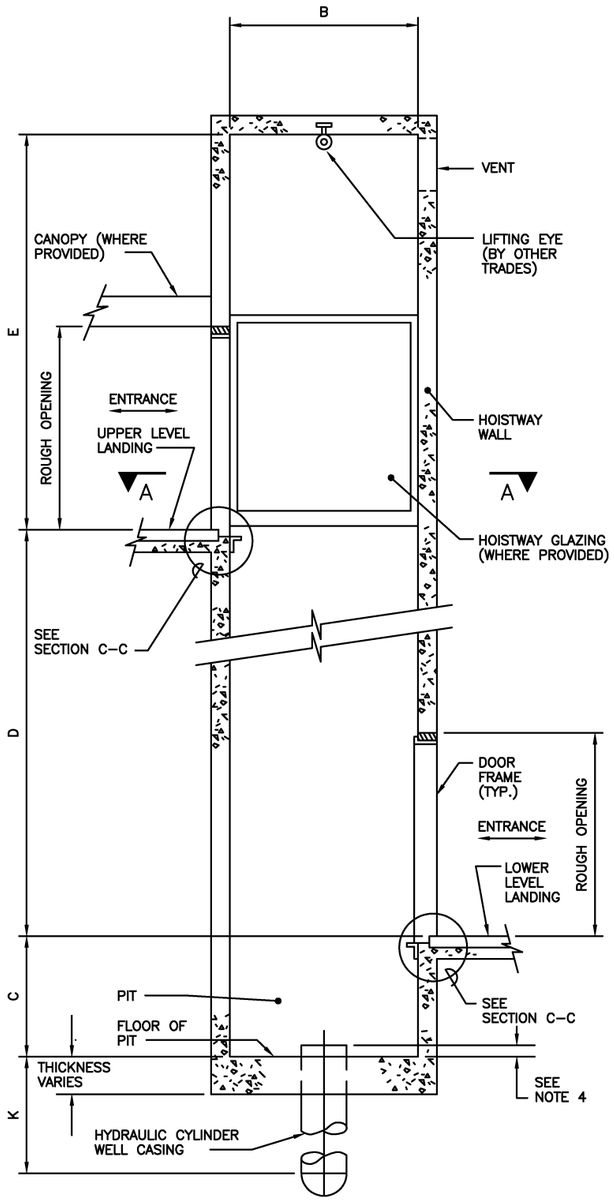

SECTION B–B

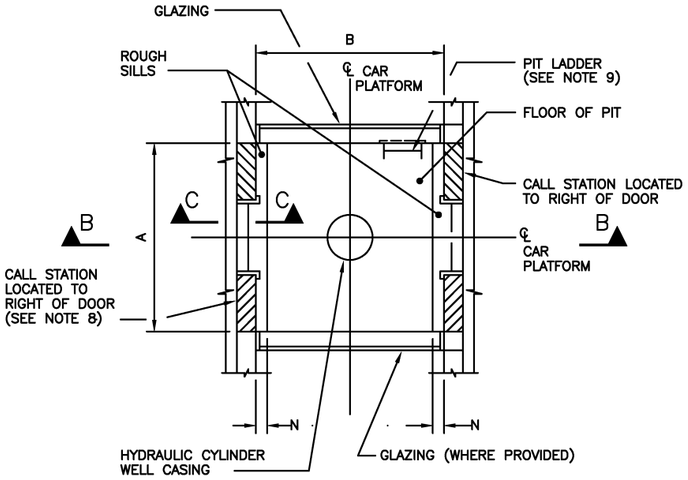

SECTION A–A

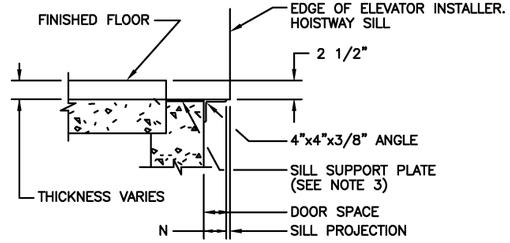

SECTION C–C : ROUGH SILL

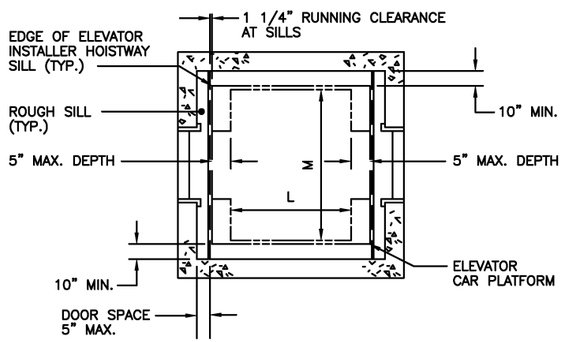

HOISTWAY/CAR INTERIOR DESIGN ALLOWANCES

NOTE: FOR ADDITIONAL DETAILS REFER TO DD–A–EL–001 THROUGH DD–A–EL–016, DD–M–108, DD–M–122, DD–M–123 & DD–M–126.

ELEVATOR NUMBER	SIDE WALL TO SIDE WALL OF HOISTWAY INTERIOR	FRONT WALL TO REAR WALL OF HOISTWAY INTERIOR	PIT DEPTH	RISE OF ELEVATOR	OVERHEAD CLEARANCE	MACHINE ROOM WIDTH	MACHINE ROOM LENGTH	MACHINE ROOM MIN. HEADRM.	DEPTH OF HYDRAULIC CYLINDER WELL CASING AND I.D. PIPE	INSIDE LENGTH (FRT. TO REAR) OF ELEVATOR CAR	INSIDE WIDTH (SIDE TO SIDE) OF ELEVATOR CAR	ROUGH SILL	MACHINE ROOM LOCATION A–ADJ. TO HOISTWAY B–REMOTE/PIPE RUN (FT.)	NUMBER OF LANDINGS
	A	B	C	D	E				K	L MIN.	M MIN.	N		
UNDERGROUND STATION														
*	9'–0"	8'–2"	4'–0"	26'–3 9/16"	12'–3"	13'–10 1/2"	10'–3"	9'–6"	35'–4" / 20'	6'–2"	7'–0"	5"±	A	2

* NUMBER ELEVATORS IN ACCORDANCE WITH THE FOLLOWING

00.0.0.0.0.0

COMPLETE ELEVATOR NUMBER

EXPLANATION OF ELEVATOR NUMBERING SYSTEM

00.0. STATION

0.0.0.0 ELEVATOR NUMBER IN STATION

00 · 0 · 0 · 0 · 0 · 0

- 00 — STRUCTURAL CONTRACT SECTION
- 0 — STATION NUMBER WITHIN SECTION
- 0 — LANDINGS SERVICED
  - A–SURFACE/MEZZ.
  - B–MEZZ./PLATFORM
  - C–SURFACE/PLATFORM
  - D–SURFACE/MEZZ./PLATFORM
- 0 — ELEVATOR TYPE
- 0 — ELEVATOR SUBCLASSIFICATION
- 0 — SINGLE ELEVATOR NO.

ABBREVIATIONS

I.D	–	INSIDE DIAMETER
FRT.	–	FRONT
ADJ.	–	ADJACENT
MIN.	–	MINIMUM
MAX.	–	MAXIMUM
FT.	–	FOOT
HEADRM.	–	HEAD ROOM

NOTES:

1. ALL DIMENSIONS GIVEN ARE NOMINAL VALUES SUBJECT TO CONSTRUCTION TOLERANCES.
2. THIS DRAWING ILLUSTRATES HOISTWAY DESIGN DETAILS. REFER TO STATION DWGS. FOR CONSTRUCTION DETAILS OF HOISTWAY AND MACHINE ROOM LOCATIONS.
3. THE SILL SUPPORT PLATE IS TO BE PROVIDED BY THE ELEVATOR INSTALLER.
4. EXTENSION OF HYDRAULIC CYLINDER WELL CASING ABOVE FLOOR OF PIT TO BE REMOVED BY ELEVATOR INSTALLER WHERE REQUIRED.
5. CATHODIC PROTECTION OF HYDRAULIC CYLINDER PER DRAWING SD–ELEV–1 SHALL BE PROVIDED BY THE ELEVATOR INSTALLER.
6. LOCATION AND SIZE OF DOOR OPENINGS SHALL BE AS SHOWN ON STATION DRAWINGS.
7. THE HOISTWAY SILL IS TO BE FURNISHED AND INSTALLED BY THE ELEVATOR INSTALLER.
8. THE HOISTWAY ENTRANCE CLADDING AND CUT–OUTS FOR ELEVATOR CONTROLS IN ENTRANCE CLADDING BY ELEVATOR INSTALLER, EXCEPT FOR CUT–OUTS IN EXTRUDED BRONZE CLADDING ON CONCRETE HOISTWAY AT STREET LEVEL WHICH ARE PROVIDED BY OTHER TRADES, COORDINATION WITH OTHER TRADES IS REQUIRED.
9. THE PIT ACCESS LADDER AND GRAB BAR BY ELEVATOR INSTALLER.
10. THE OVERALL CAR (OUTSIDE TO OUTSIDE) SIZE IS 7'–4" x 7'–4".

GENERAL NOTES:

1. NOMINAL VALUES OR VALUES FROM OTHER CONTRACTS USED BY WAY OF EXAMPLE. THE CONTRACTOR SHALL INSERT NAMES, LOCATIONS, VALUES AND DATA BASED ON THE DESIGN AND INSTALLATION FOR THIS PROJECT.
2. THIS DRAWING IS PROVIDED FOR ILLUSTRATION ONLY TO INDICATE TYPE AND APPEARANCE OF INFORMATION REQUIRED BY WMATA.

DESIGNED	K. PATEL	2–01 DATE
DRAWN	L. POWELL	2–01 DATE
CHECKED	J. BUMANIS	2–01 DATE
APPROVED	R. GANERIWAL	2–01 DATE

REFERENCE DRAWINGS

NUMBER	DESCRIPTION

REVISIONS

DATE	BY	DESCRIPTION
08/2001	SYSP	Revised and issued by the Authority

WASHINGTON METROPOLITAN AREA TRANSIT AUTHORITY

DEPARTMENT OF TRANSIT SYSTEM DEVELOPMENT
OFFICE OF SYSTEMS

SUBMITTED _____ DATE

APPROVED _____ DIRECTOR May 3, 2001 DATE

HYDRAULIC ELEVATOR INSTALLATION

ELEVATOR PLANS AND SECTIONS–SURFACE
(CONCRETE HOISTWAY–TWO DOORS)

SCALE NOT TO SCALE

DRAWING NO. ST–ELEV–011

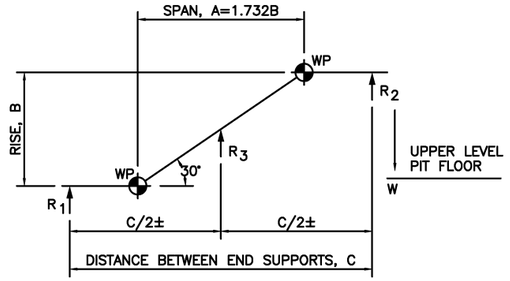

TWO END SUPPORTS, ONE INTERMEDIATE SUPPORT WHERE SHOWN

RISE, B (FT)	R_1 (KIPS)	R_2 (KIPS)	R_3 (KIPS)	DRIVE WEIGHT,W (KIPS)
10	19	20	–	INTERNAL
11	19	20	–	INTERNAL
12	20	21	–	INTERNAL
13	21	22	–	INTERNAL
14	21	22	–	INTERNAL
15	22	23	–	INTERNAL
16	23	24	–	INTERNAL
17	23	24	–	INTERNAL
18	12	13	24	INTERNAL
19	13	13	26	INTERNAL
20	13	14	26	INTERNAL

FIG. 1
SEE NOTE 4

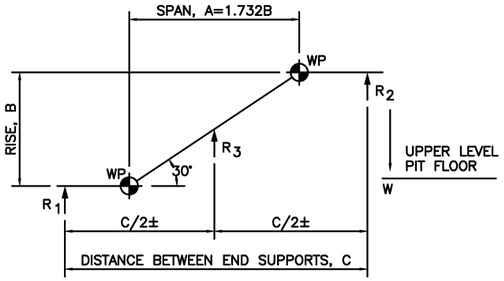

TWO END SUPPORTS, ONE INTERMEDIATE SUPPORT

RISE, B (FT)	R_1 (KIPS)	R_2 (KIPS)	R_3 (KIPS)	DRIVE WEIGHT,W (KIPS)
20+	16	17	33	INTERNAL
25	18	20	36	INTERNAL
30	21	23	40	INTERNAL
35	23	26	44	INTERNAL
40	26	29	48	INTERNAL

FIG. 2
SEE NOTE 4

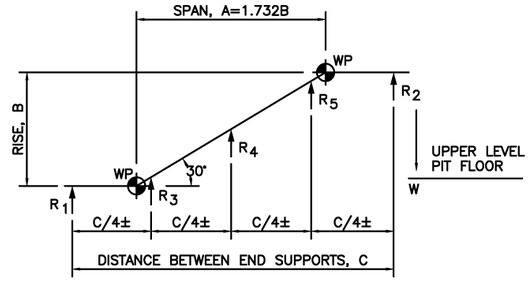

TWO END SUPPORTS, THREE INTERMEDIATE SUPPORTS

RISE, B (FT)	R_1 (KIPS)	R_2 (KIPS)	R_3 (KIPS)	R_4 (KIPS)	R_5 (KIPS)	DRIVE WEIGHT,W (KIPS)
60+	25	27	39	28	42	INTERNAL
65	26	28	41	30	43	INTERNAL
70	27	30	43	32	45	INTERNAL
75	29	32	45	34	47	INTERNAL
80	31	34	47	37	49	INTERNAL

FIG. 4
SEE NOTE 4

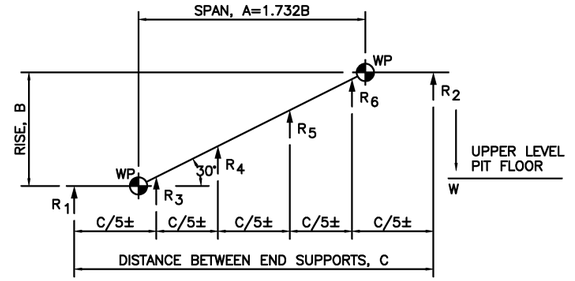

TWO END SUPPORTS, FOUR INTERMEDIATE SUPPORTS

RISE, B (FT)	R_1 (KIPS)	R_2 (KIPS)	R_3 (KIPS)	R_4 (KIPS)	R_5 (KIPS)	R_6 (KIPS)	DRIVE WEIGHT,W (KIPS)
80+	26	28	42	32	32	46	INTERNAL
85	27	29	44	33	32	48	INTERNAL
90	29	31	46	34	33	50	INTERNAL
95	30	32	48	35	35	53	INTERNAL
100	31	34	50	37	36	55	INTERNAL

FIG. 5
SEE NOTE 4

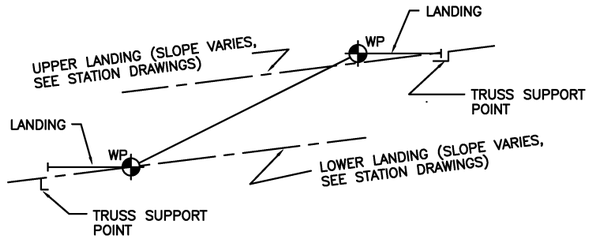

FIG. 6
SEE NOTE 3

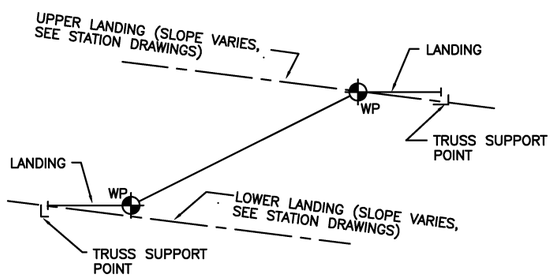

FIG. 7
SEE NOTE 3

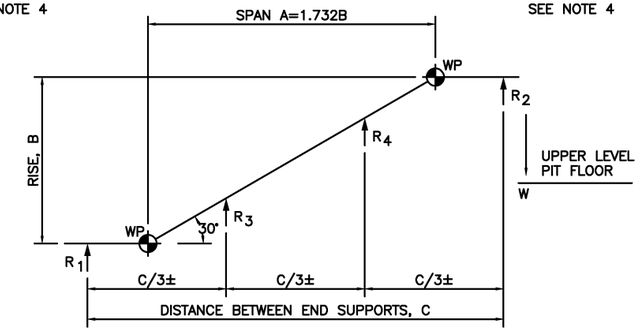

TWO END SUPPORTS, TWO INTERMEDIATE SUPPORTS

RISE, B (FT)	R_1 (KIPS)	R_2 (KIPS)	R_3 (KIPS)	R_4 (KIPS)	DRIVE WEIGHT,W (KIPS)
40+	22	24	29	29	INTERNAL
45	24	26	31	31	INTERNAL
50	26	28	34	34	INTERNAL
50+	27	29	42	44	INTERNAL
55	28	31	44	47	INTERNAL
60	30	34	48	49	INTERNAL

FIG. 3
SEE NOTE 4

NOTES:

1. LINEAR INTERPOLATION MAY BE USED FOR RISES NOT GIVEN.
2. SYMBOLS AND ABBREVIATIONS
   WP= ESCALATOR WORKING POINT
   KIPS= UNITS OF WEIGHT, 1,000 LB
3. FIGURE 6 AND FIGURE 7 SHOW THE METHOD OF WORKING POINT PLACEMENT ON THE STATION CONTRACT DRAWINGS WHEN A DESIGNED SLOPE IS TO BE USED AT MEZZANINE, TRAIN PLATFORM OR OTHER SURFACE. THE FINISHED FLOOR SHALL BE WARPED AWAY FROM THE LANDING PLATES TO PREVENT DRAINAGE INTO THE PITS.
4. ESCALATOR INSTALLER MUST REFER TO STATION DESIGN INSTALLER DRAWINGS FOR SPECIFIC SUPPORT DESIGN DETAILS.

1. EXPLANATION OF ESCALATOR NUMBERING SYSTEM

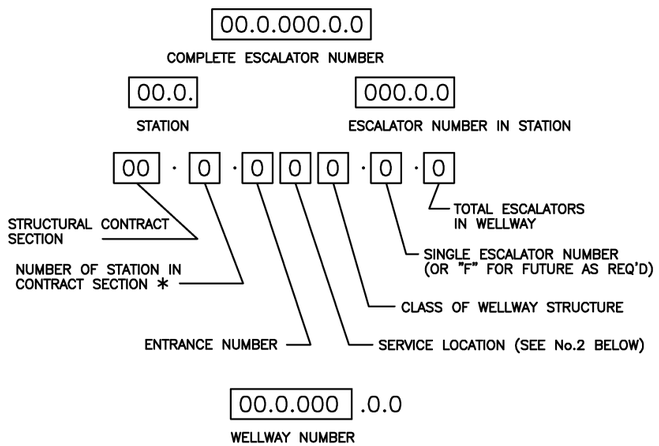

* MAY BE EITHER TWO OR THREE ALPHANUMERIC CHARACTERS

2. EXPLANATION OF SERVICE LOCATION DESIGNATIONS

- D= STREET ENTRANCE TO INTERMEDIATE LANDING ABOVE MEZZANINE.
- E= FROM INTERMEDIATE LANDING TO MEZZANNINE PROPER.
- F= ESCALATOR DESIGNATION FOR FUTURE INSTALLATION (USED IN PLACE OF SINGLE ESCALATOR NUMBER).
- G= INTERIOR BUILDING ENTRANCE.
- P= MEZZANINE TO TRAIN PLATFORM.
- R= ABOVE GROUND STATION.
- S= STREET ENTRANCE DIRECT TO MEZZANINE.

This Drawing Reflects a WMATA standard design approach. Project specific drawings must be developed by the Contractor which reflect this Design Philosophy

NOTE: FOR ADDITIONAL DETAILS REFER TO DD–A–ESC–001 THROUGH DD–A–ESC–011, DD–M–063 THROUGH DD–M–067, DD–M–079 & DD–M–080.

DESIGNED	K. PATEL	2–01 DATE
DRAWN	L. POWELL	2–01 DATE
CHECKED	J. BUMANIS	2–01 DATE
APPROVED	R. GANERIWAL	2–01 DATE

REFERENCE DRAWINGS

NUMBER	DESCRIPTION

REVISIONS

DATE	BY	DESCRIPTION
08/2001	SYSP	Revised and issued by the Authority

WASHINGTON METROPOLITAN AREA TRANSIT AUTHORITY

DEPARTMENT OF TRANSIT SYSTEM DEVELOPMENT
OFFICE OF SYSTEMS

SUBMITTED _____ DATE

APPROVED _____ DIRECTOR May 3, 2001 DATE

ESCALATOR
LOADS AND DETAILS

SCALE: NONE

DRAWING NO.: ST–ESC–001

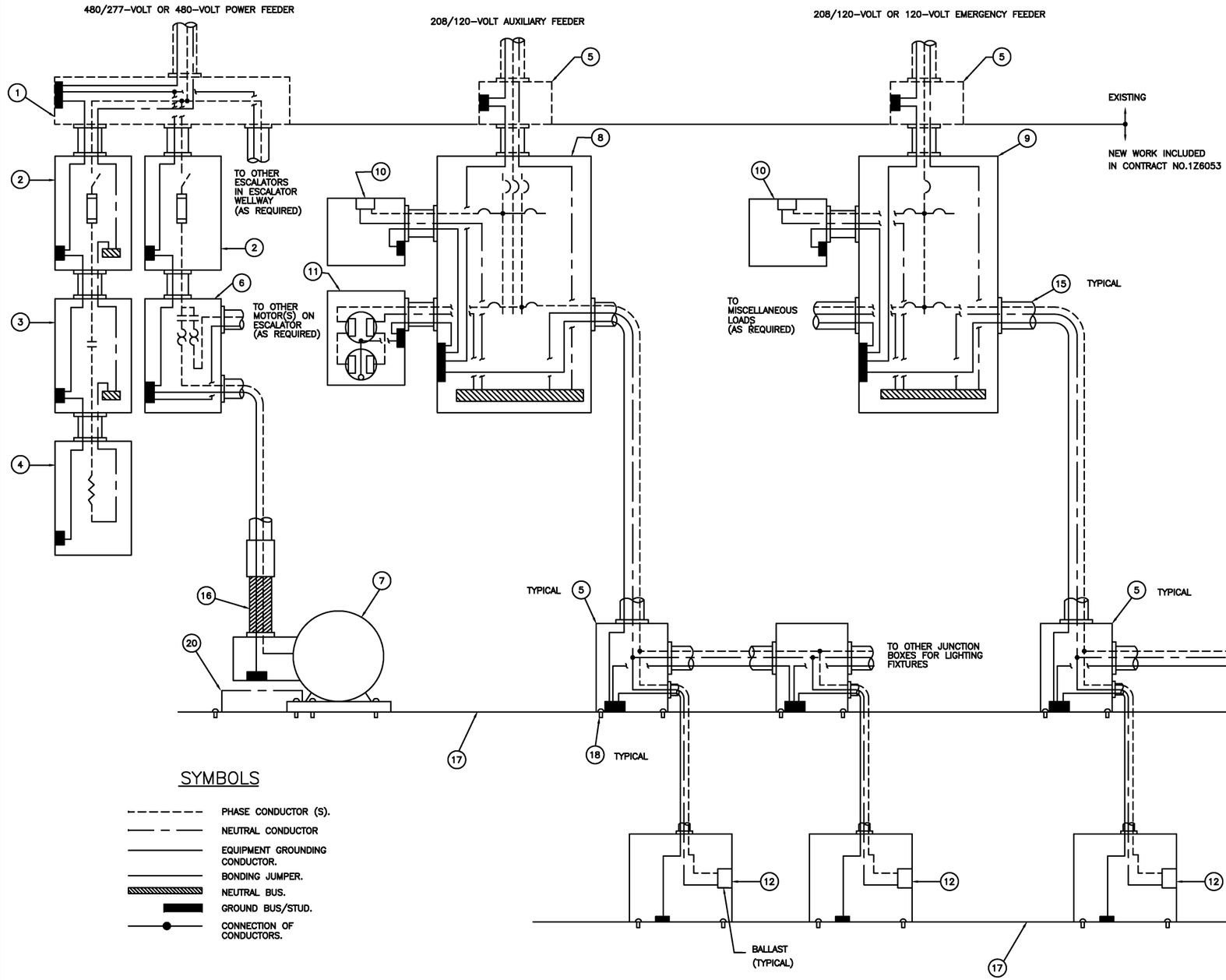

SYMBOLS

- PHASE CONDUCTOR (S).
- NEUTRAL CONDUCTOR
- EQUIPMENT GROUNDING CONDUCTOR.
- BONDING JUMPER.
- NEUTRAL BUS.
- GROUND BUS/STUD.
- CONNECTION OF CONDUCTORS.

LEGEND

1. TAP BOX OR TROUGH
2. 480–VOLT, 3–POLE DISCONNECT DEVICE.
3. CONTROLLER FOR ESCALATOR HEATER(S).
4. ESCALATOR HEATER.
5. JUNCTION BOX.
6. CONTROLLER FOR ESCALATOR DRIVE MOTOR(S).
7. ESCALATOR DRIVE MOTOR.
8. 208/120–VOLT, 3–PHASE, 4–WIRE PANELBOARD.
9. 208/120–VOLT, 1–PHASE, 3–WIRE OR 120–VOLT, 1–PHASE, 2–WIRE PANELBOARD.
10. MAINTENANCE LIGHTING FIXTURE.
11. DUPLEX RECEPTACLE.
12. TYPE CST LIGHTING FIXTURE.
13. NOT USED
14. NOT USED
15. GALVANIZED STEEL RIGID CONDUIT WITH DOUBLE LOCKNUTS AT EACH CONNECTION TO METALLIC ENCLOSURE.
16. MINIMUM 18–INCH LONG LIQUID–TIGHT FLEXIBLE CONDUIT.
17. ESCALATOR STRUCTURE (INCLUDES TRUSSES, BALUSTRADES, CLADDING, ETC.).
18. METALLIC FASTENER PROVIDING ELECTRICAL CONTINUITY BETWEEN EQUIPMENT METALLIC ENCLOSURE & ESCALATOR METTALIC STRUCTURE.
19. NOT USED
20. BARE #8 AWG MINIMUM BONDING JUMPER BETWEEN GROUNDED MOTOR FRAME & TRUSS OF ESCALATOR STRUCTURE.
21. NOT USED
22. STEP DEMARCATION, OR COMB PLATE LIGHTING FIXTURE.

NOTES:

1. GROUNDING, DETAILS INDICATED ARE FOR A TYPICAL' CIRCUIT CONFIGURATION AND MAY BE MODIFIED TO SUIT ACTUAL FIELD CONDITIONS PROVIDED THE INTENT OF GROUNDING REQUIREMENTS AS SHOWN AND SPECIFIED ARE MET.
2. ELECTRICAL EQUIPMENT SHALL BE PROVIDED WITH A MINIMUM OF TWO GROUND PATHS AS FOLLOWS:
   - GREEN INSULATED EQUIPMENT GROUNDING CODUCTOR.
   - CONNECTION TO GROUNDED METALLIC FASTENERS, METALLIC CONDUIT AND/OR BONDING JUMPER.

This Drawing Reflects a WMATA standard design approach. Project specific drawings must be developed by the Contractor which reflect this Design Philosophy

NOTE: FOR ADDITIONAL DETAILS REFER TO DD–A–ESC–001 THROUGH DD–A–ESC–011, DD–M–063 THROUGH DD–M–067, DD–M–079 & DD–M–080.

DESIGNED D. GLEN 2–01 DATE
DRAWN R. THOMAS JR. 2–01 DATE
CHECKED W. TINKHAM 2–01 DATE
APPROVED R. GANERIWAL 2–01 DATE

REFERENCE DRAWINGS

NUMBER	DESCRIPTION

REVISIONS

DATE	BY	DESCRIPTION
08/2001	SYSP	Revised and issued by the Authority

WASHINGTON METROPOLITAN AREA TRANSIT AUTHORITY

DEPARTMENT OF TRANSIT SYSTEM DEVELOPMENT
OFFICE OF SYSTEMS

SUBMITTED DATE

APPROVED DIRECTOR May 3, 2001 DATE

ESCALATOR GROUNDING DIAGRAM

SCALE NONE

DRAWING NO. ST–ESC–002

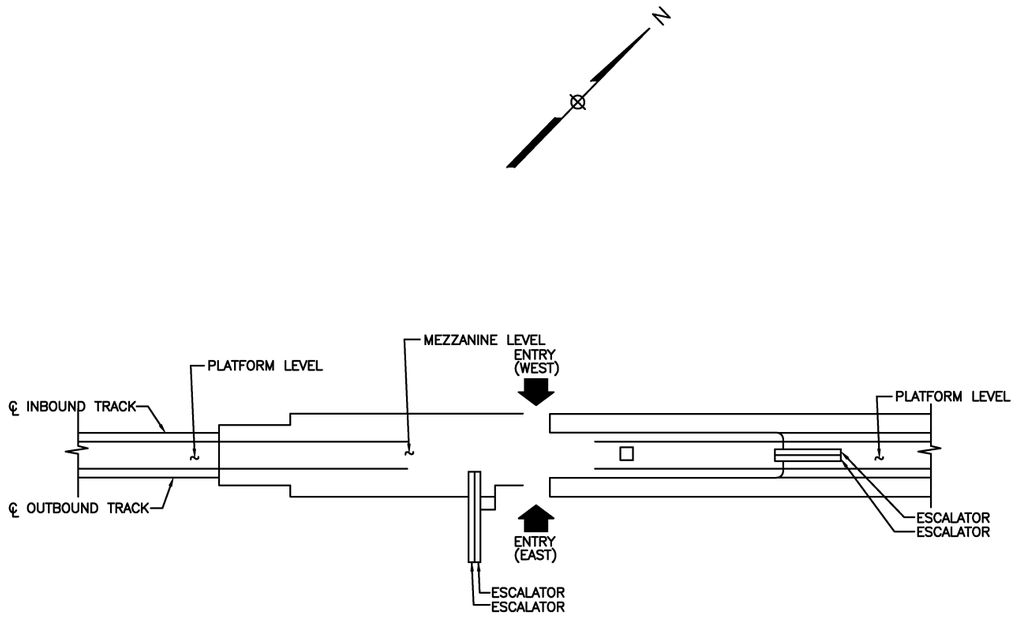

AT GRADE STATION

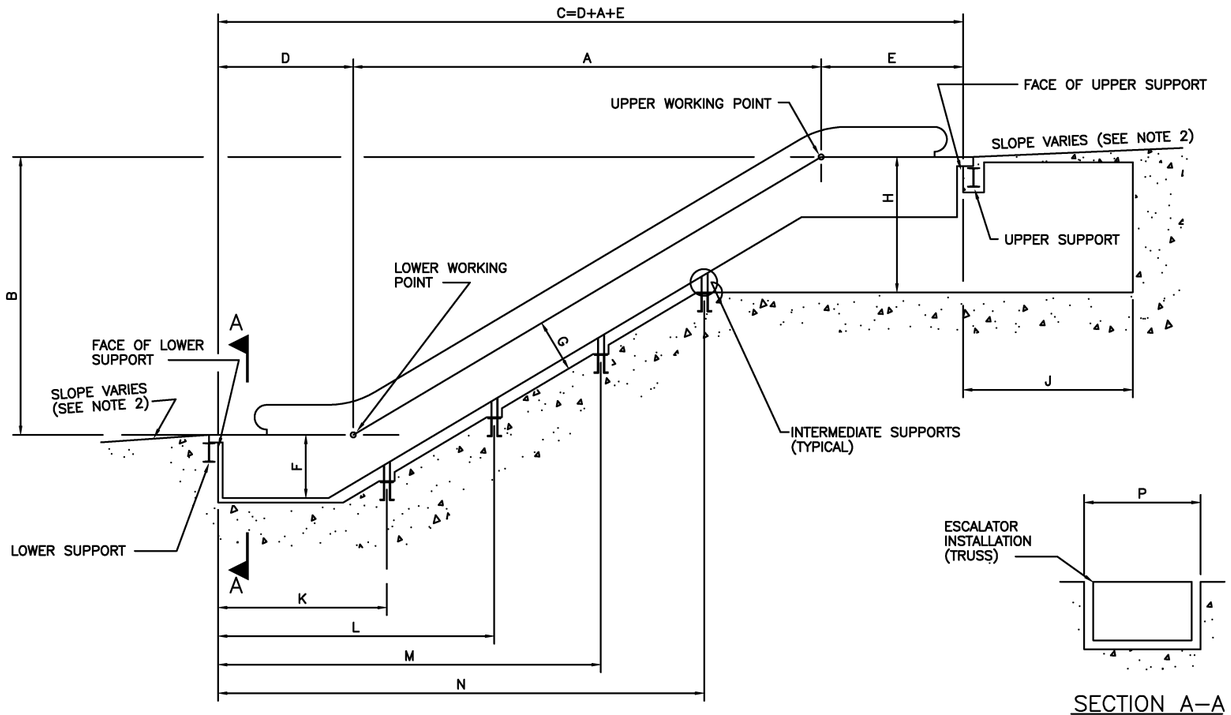

TYPICAL ESCALATOR INSTALLATION

SECTION A–A
FINISHED OPENING

ESCALATOR NUMBER	LENGTH BETWEEN WORKING POINTS (SPAN)	VERTICAL RISE	LENGTH BETWEEN END SUPPORTS	LOWER SUPPORT TO WORKING POINT	WORKING POINT TO UPPER SUPPORT	DEPTH OF PIT LOWER LEVEL	NOSE LINE TO BOTTOM CLEARANCE LINE	DEPTH OF PIT UPPER LEVEL	UPPER LEVEL PIT CLEARANCE	TO 1 INTERMEDIATE SUPPORT	TO 2 INTERMEDIATE SUPPORT	TO 3 INTERMEDIATE SUPPORT	TO 4 INTERMEDIATE SUPPORT	FINISHED OPENING	TOTAL CLASS "A"	TOTAL CLASS "B"	TOTAL CLASS "C"	FIRE SUPPRESSION SYSTEM REQUIRED	ELECTRIC HEATERS REQUIRED	FOLDING GATE INTERLOCK
No.	A	B	C	D	E	F	G	H	J	K	L	M	N	P						
* *	31'–9 1/2"	18'–4 5/16"	54'–0 7/8"	9'–8 3/8"	12'–7"	4'–3"	4'–0"	–	–	27'–1"	–	–	–	11'–6"	2	–	–	NO	YES	NO
* *	31'–2 3/8"	18'–0"	53'–5 3/4"	9'–8 3/8"	12'–7"	4'–0"	4'–0"	–	–	26'–8 3/4"	–	–	–	11'–6"	2	–	–	NO	YES	YES

* NUMBER ESCALATOR PER SD–ESC–1

NOTE:

1. FOR LOAD CAPACITY OF ESCALATOR SUPPORTS SEE DRAWING No. SD–ESC–1
2. FOR ESTABLISHMENT OF WORKING POINT WITH RESPECT TO FLOOR WITH SLOPE, SEE DRAWING No. SD–ESC–1
3. ESCALATOR INSTALLER TO VERIFY DIMENSIONS WITH STATION DRAWINGS AND THROUGH SITE SURVEY IF POSSIBLE.

GENERAL NOTES:

1. NOMINAL VALUES OR VALUES FROM OTHER CONTRACTS USED BY WAY OF EXAMPLE. THE CONTRACTOR SHALL INSERT NAMES, LOCATIONS, VALUES AND DATA BASED ON THE DESIGN AND INSTALLATION FOR THIS PROJECT.
2. THIS DRAWING IS PROVIDED FOR ILLUSTRATION ONLY TO INDICATE TYPE AND APPEARANCE OF INFORMATION REQUIRED BY WMATA.

This Drawing Reflects a WMATA standard design approach. Project specific drawings must be developed by the Contractor which reflect this Design Philosophy

NOTE: FOR ADDITIONAL DETAILS REFER TO DD–A–ESC–001 THROUGH DD–A–ESC–011, DD–M–063 THROUGH DD–M–067, DD–A–U–007 & DD–M–080.

DESIGNED R. PATEL 2–01 DATE
DRAWN R. THOMAS, JR. 2–01 DATE
CHECKED J. BUMANIS 2–01 DATE
APPROVED R. GANERIWAL 2–01 DATE

REFERENCE DRAWINGS

NUMBER	DESCRIPTION

REVISIONS

DATE	BY	DESCRIPTION
08/2001	SYSP	Revised and issued by the Authority

WASHINGTON METROPOLITAN AREA TRANSIT AUTHORITY

DEPARTMENT OF TRANSIT SYSTEM DEVELOPMENT
OFFICE OF SYSTEMS

SUBMITTED DATE

APPROVED DIRECTOR May 3, 2001 DATE

ESCALATORS XIII
AT GRADE STATION
ESCALATOR STRUCTURAL WELLWAY TABULATION

SCALE NONE

DRAWING NO. ST–ESC–003

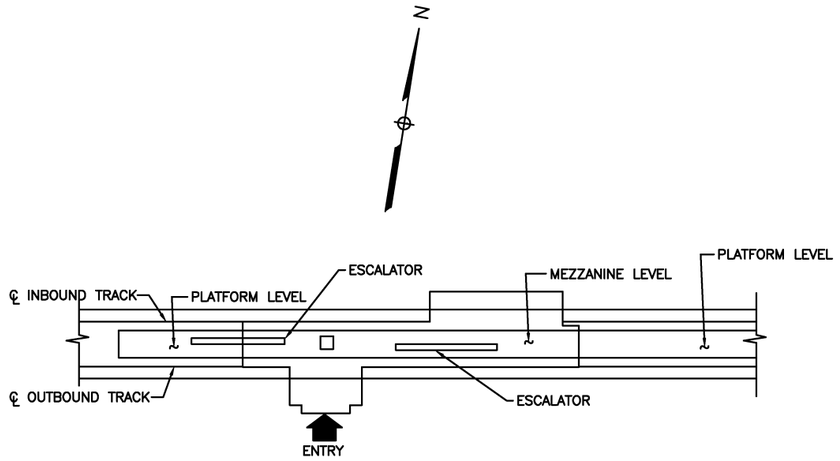

AERIAL STATION

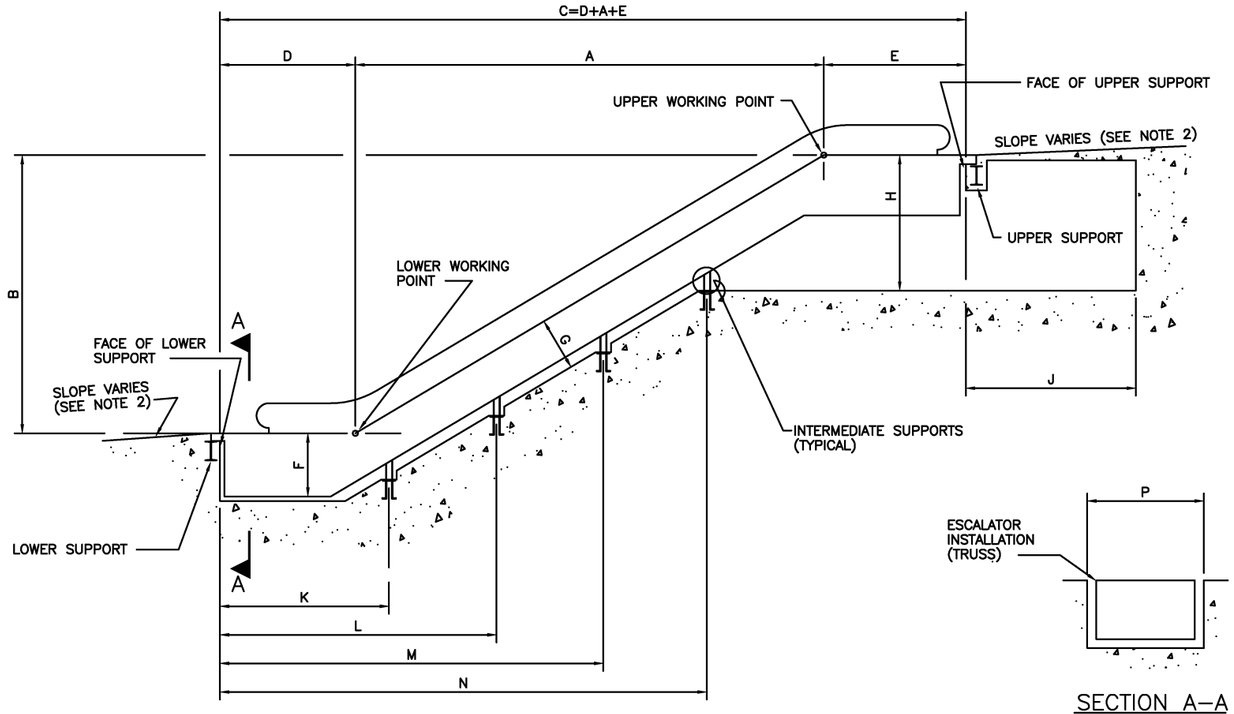

TYPICAL ESCALATOR INSTALLATION

SECTION A–A
FINISHED OPENING

ESCALATOR NUMBER	LENGTH BETWEEN WORKING POINTS (SPAN)	VERTICAL RISE	LENGTH BETWEEN END SUPPORTS	LOWER SUPPORT TO WORKING POINT	WORKING POINT TO UPPER SUPPORT	DEPTH OF PIT LOWER LEVEL	NOSE LINE TO BOTTOM CLEARANCE LINE	DEPTH OF PIT UPPER LEVEL	UPPER LEVEL PIT CLEARANCE	TO 1 INTERMEDIATE SUPPORT	TO 2 INTERMEDIATE SUPPORT	TO 3 INTERMEDIATE SUPPORT	TO 4 INTERMEDIATE SUPPORT	FINISHED OPENING	TOTAL CLASS "A"	TOTAL CLASS "B"	TOTAL CLASS "C"	FIRE SUPPRESSION SYSTEM REQUIRED	ELECTRIC HEATERS REQUIRED	FOLDING GATE INTERLOCK
No.	A	B	C	D	E	F	G	H	J	K	L	M	N	P						
*	47'–10 1/4"	27'–7 1/2"	70'–3 5/8"	9'–8 3/8"	12'–9"	4'–3"	4'–0"	4'–4"	–	26'–0 7/8"	48'–11 1/8"	–	–	5'–10 1/2"	–	1	–	NO	YES	NO
*	49'–2 3/4"	28'–5"	71'–8 1/8"	9'–8 3/8"	12'–9"	4'–3"	4'–0"	13'–4"	–	27'–0 1/8"	49'–2 1/8"	–	–	5'–10 1/2"	–	1	–	NO	YES	NO

* NUMBER ESCALATOR PER SD–ESC–1

NOTE:

1. FOR LOAD CAPACITY OF ESCALATOR SUPPORTS SEE DRAWING No. SD–ESC–1
2. FOR ESTABLISHMENT OF WORKING POINT WITH RESPECT TO FLOOR WITH SLOPE, SEE DRAWING No. SD–ESC–1
3. ESCALATOR INSTALLER TO VERIFY DIMENSIONS WITH STATION DRAWINGS AND THROUGH SITE SURVEY IF POSSIBLE.

GENERAL NOTES:

1. NOMINAL VALUES OR VALUES FROM OTHER CONTRACTS USED BY WAY OF EXAMPLE. THE CONTRACTOR SHALL INSERT NAMES, LOCATIONS, VALUES AND DATA BASED ON THE DESIGN AND INSTALLATION FOR THIS PROJECT.
2. THIS DRAWING IS PROVIDED FOR ILLUSTRATION ONLY TO INDICATE TYPE AND APPEARANCE OF INFORMATION REQUIRED BY WMATA.

This Drawing Reflects a WMATA standard design approach. Project specific drawings must be developed by the Contractor which reflect this Design Philosophy

NOTE: FOR ADDITIONAL DETAILS REFER TO DD–A–ESC–001 THROUGH DD–A–ESC–011, DD–M–063 THROUGH DD–M–067, DD–M–079 & DD–M–080.

DESIGNED R. PATEL 2–01 DATE
DRAWN R. THOMAS, JR. 2–01 DATE
CHECKED J. BUMANIS 2–01 DATE
APPROVED R. GANERIWAL 2–01 DATE

REFERENCE DRAWINGS

NUMBER	DESCRIPTION

REVISIONS

DATE	BY	DESCRIPTION
08/2001	SYSP	Revised and issued by the Authority

WASHINGTON METROPOLITAN AREA TRANSIT AUTHORITY

DEPARTMENT OF TRANSIT SYSTEM DEVELOPMENT
OFFICE OF SYSTEMS

SUBMITTED DATE

APPROVED DIRECTOR May 3, 2001 DATE

ESCALATORS XIII
AERIAL STATION
ESCALATOR STRUCTURAL WELLWAY TABULATION

SCALE NONE

DRAWING NO. ST–ESC–004

PASSENGER STATION NAME & ESCALATOR NO.	480/277V,3ø,4W OR 480V,3ø,3W POWER FEEDER – RACEWAY & WIRE *								208/120V,3ø,4W AUXILIARY FEEDER – RACEWAY & WIRE *								208/120V,1ø,3W OR 120V,1ø,2W EMERGENCY FEEDER – RACEWAY & WIRE *							
	RACEWAY NO.	RACEWAY SIZE	FROM	TO	REF.DWG.NO. ***	WIRE NO. & SIZE	SUPPLYING PNL.CKT.NO.	C.B–NO POLES & TRIP	RACEWAY NO.	RACEWAY SIZE	FROM	TO	REF.DWG.NO. ***	WIRE NO. & SIZE	SUPPLYING PNL.CKT.NO.	C.B–NO POLES & TRIP	RACEWAY NO.	RACEWAY SIZE	FROM	TO	REF.DWG.NO. ***	WIRE NO. & SIZE	SUPPLYING PNL.CKT.NO.	SW–No. POLES & FUSE RATING
UNDERGROUND																								
* * MEZZ. TO SURFACE	P37 P37A	3"	SWBD DSS S.A.C. SWBD RM	TAP BOX UPPER ESC. PIT		4/C#3/0, 1#6G	DSS–9	3P–200A	P185	1"	PANEL NESS2 PASSAGE ELECTRIC RM.	J.B. IN UPPER ESC. PIT		4#10,1#10G	NESS2–8, 10,12	3P–30A	P186	1"	PANEL NEE2 PASSAGE ELECTRIC RM.	J.B. IN UPPER ESC. PIT		3#12,1#12G	NEE2–6	2P–20A
* * * MEZZ. TO SURFACE	P29 P29A P29B	3"	SWBD DSN N.A.C. SWBD RM	TAP BOX UPPER ESC. PIT		4#3/0,1#6G	DSN–10	3P–200A	P30	1"	PANEL NESS2 PASSAGE ELECTRIC RM.	J.B. IN UPPER ESC. PIT		4#10,1#10G	NESS2–2,4, 6	3P–30A	P31	1"	PANEL NEE2 PASSAGE ELECTRIC RM.	J.B. IN UPPER ESC. PIT		3#12,1#12G	NEE2–3	2P–20A
* * MEZZ. TO PLATFORM	P82 P82A	1 1/2"	SWBD DSS S.A.C. SWBD RM	J.B. UPPER ESC. PIT		3#6,1#10G	DSS–15	3P–70A	P84 P84A	1"	PANEL SESS1 S. A.C. SWBD. RM.	J.B. IN UPPER ESC. PIT		4#10,1#10G	SESS1–6	3P–20A	P83 P83A	1"	PANEL SEE1 S. A.C. SWBD RM.	J.B. IN UPPER ESC. PIT		2#12,1#12G	SEE1–6	1P–20A
UNDERGROUND																								
* * * MEZZ. TO SURFACE	82	3"	SWBD NAC N.A.C. SWGR RM	TAP BOX UPPER ESC. PIT		4#3/0,1#6G	NAC–2	3P–200A *	116	1"	PANEL NESSU MEZZ. ELECT. RM	J.B. IN UPPER ESC. PIT		4#10,1#10G	NESSU–7	3P–30A	100	3/4'	PANEL MEL MEZZ. ELECT. RM.	J.B. IN UPPER ESC. PIT		3#12,1#12G	MEL–1	2P–20A
* * MEZZ. TO SURFACE	126	2"	SWBD NAC N.A.C. SWGR RM	TAP BOX UPPER ESC. PIT		4#1,1#6G	NAC–11	3P–150A	117	1"	PANEL NESSU MEZZ. ELECT. RM	J.B. IN UPPER ESC. PIT		4#10,1#10G	NESSU–8	3P–30A	105	3/4'	PANEL MEL MEZZ. ELECT. RM.	J.B. IN UPPER ESC. PIT		3#12,1#12G	MEL–2	2P–20A
* * MEZZ. TO PLATFORM	61	1 1/2"	SWBD SAC S.A.C. SWGR RM	TAP BOX UPPER ESC. PIT		4#4,1#8G	SAC–16	3P–100A	141	1"	PANEL NESSU MEZZ. ELECT. RM	J.B. IN UPPER ESC. PIT		4#10,1#10G	NESSU–9	3P–30A	128	3/4'	PANEL MEL MEZZ. ELECT. RM.	J.B. IN UPPER ESC. PIT		2#12,1#12G	MEL–3	1P–20A
UNDERGROUND																								
* * * *	16	3"	SWBD FB2 S.A.C. SWBD RM	TAP BOX UPPER ESC. PIT		4#250KCMIL, 1#2G	FB2–5	3P–300A	17	1"	PANEL SESS S. A.C. SWBD. RM.	J.B. IN UPPER ESC. PIT		4#8,1#10G	SESS–22	3P–30A	18	1"	PANEL SEE S. A.C. SWBD RM.	J.B. IN UPPER ESC. PIT		3#10,1#10G	SEE–4	2P–20A
* * MEZZ. TO SURFACE	12	2 1/2"	SWBD FB2 S.A.C. SWBD RM	TAP BOX UPPER ESC. PIT		4#2/0,1#4G	FB2–6	3P–200A	13	1"	PANEL SESS S. A.C. SWBD. RM.	J.B. IN UPPER ESC. PIT		4#8,1#10G	SESS–20	3P–30A	14	1"	PANEL SEE S. A.C. SWBD RM.	J.B. IN UPPER ESC. PIT		3#10,1#10G	SEE–3	2P–20A
* * MEZZ. TO PLATFORM	20	2"	SWBD FB1 S.A.C. SWBD RM	TAP BOX UPPER ESC. PIT		3#3,1#8G	FB1–15	3P–100A	21	1"	PANEL SESS S. A.C. SWBD. RM.	J.B. IN UPPER ESC. PIT		4#8,1#10G	SESS–23	3P–20A	22	1"	PANEL SEE S. A.C. SWBD RM.	J.B. IN UPPER ESC. PIT		2#10,1#12G	SEE–2	1P–20A

* INFORMATION PROVIDED IS FOR ILLUSTRATION ONLY. PROVIDE DATA BASED ON ACTUAL INSTALLATIONS.

** CONTRACTOR/DESIGNER TO COMPLETE.

ABBREVIATIONS

A.C	ALTERNATING CURRENT	No.,#	NUMBER
A	AMPERE	P	POLE
C.B.	CIRCUIT BREAKER	ø	PHASE
CKT	CIRCUIT	PNL	PANEL
DWG.	DRAWING	REF.	REFERENCE
ESC	ESCALATOR	RM.	ROOM
G	GROUND	S	SOUTH
J.B.	JUNCTION BOX	SW	SWITCH
MEZZ.	MEZZANINE	SWBD	SWITCHBOARD
N	NORTH	SWGR	SWITCHGEAR
		W	WIRE

NOTES:

1. RACEWAYS, CIRCUIT BREAKERS, FUSES, JUNCTION BOXES AND WIRING SHOWN ABOVE ARE EXISTING. ADDITIONAL RACEWAYS, WIRING AND OTHER ELECTRICAL EQUIPMENT SHALL BE INSTALLED AS REQUIRED IN THIS CONTRACT.

GENERAL NOTES:

1. NOMINAL VALUES OR VALUES FROM OTHER CONTRACTS USED BY WAY OF EXAMPLE. THE CONTRACTOR SHALL INSERT NAMES, LOCATIONS, VALUES AND DATA BASED ON THE DESIGN AND INSTALLATION FOR THIS PROJECT.
2. THIS DRAWING IS PROVIDED FOR ILLUSTRATION ONLY TO INDICATE TYPE AND APPEARANCE OF INFORMATION REQUIRED BY WMATA.

NOTE: FOR ADDITIONAL DETAILS REFER TO DD–A–ESC–001 THROUGH DD–A–ESC–011, DD–M–063 THROUGH DD–M–067, DD–M–079 & DD–M–080.

DESIGNED _____ DATE

DRAWN _____ DATE

CHECKED _____ DATE

APPROVED _____ DATE

REFERENCE DRAWINGS

NUMBER	DESCRIPTION

REVISIONS

DATE	BY	DESCRIPTION
08/2001	SYSP	Revised and issued by the Authority

WASHINGTON METROPOLITAN AREA TRANSIT AUTHORITY

DEPARTMENT OF TRANSIT SYSTEM DEVELOPMENT
OFFICE OF SYSTEMS

SUBMITTED _____ DATE

APPROVED _____ DIRECTOR May 3, 2001 DATE

ESCALATOR
FEEDER SCHEDULE

SCALE NONE

DRAWING NO. ST–ESC–005

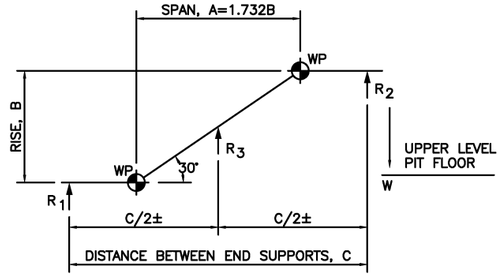

TWO END SUPPORTS, ONE INTERMEDIATE SUPPORT WHERE SHOWN

RISE, B (FT)	R_1 (KIPS)	R_2 (KIPS)	R_3 (KIPS)	DRIVE WEIGHT,W (KIPS)
10	19	20	–	INTERNAL
11	19	20	–	INTERNAL
12	20	21	–	INTERNAL
13	21	22	–	INTERNAL
14	21	22	–	INTERNAL
15	22	23	–	INTERNAL
16	23	24	–	INTERNAL
17	23	24	–	INTERNAL
18	12	13	24	INTERNAL
19	13	13	26	INTERNAL
20	13	14	26	INTERNAL

FIG. 1
SEE NOTE 4

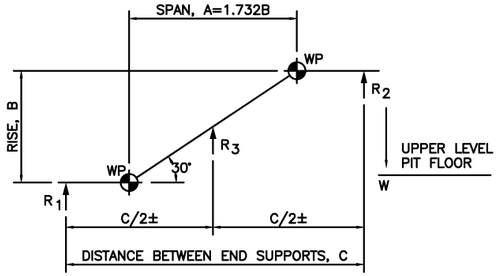

TWO END SUPPORTS, ONE INTERMEDIATE SUPPORT

RISE, B (FT)	R_1 (KIPS)	R_2 (KIPS)	R_3 (KIPS)	DRIVE WEIGHT,W (KIPS)
20+	16	17	33	INTERNAL
25	18	20	36	INTERNAL
30	21	23	40	INTERNAL
35	23	26	44	INTERNAL
40	26	29	48	INTERNAL

FIG. 2
SEE NOTE 4

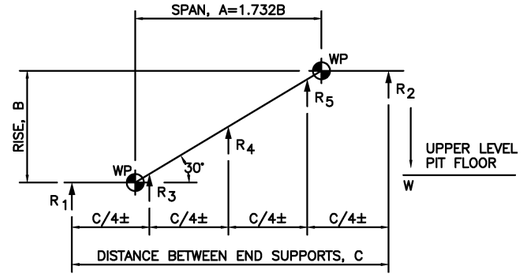

TWO END SUPPORTS, THREE INTERMEDIATE SUPPORTS

RISE, B (FT)	R_1 (KIPS)	R_2 (KIPS)	R_3 (KIPS)	R_4 (KIPS)	R_5 (KIPS)	DRIVE WEIGHT,W (KIPS)
60+	25	27	39	28	42	INTERNAL
65	26	28	41	30	43	INTERNAL
70	27	30	43	32	45	INTERNAL
75	29	32	45	34	47	INTERNAL
80	31	34	47	37	49	INTERNAL

FIG. 4
SEE NOTE 4

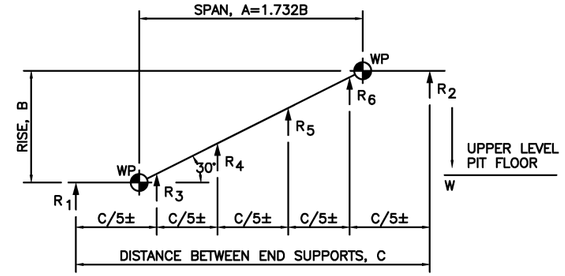

TWO END SUPPORTS, FOUR INTERMEDIATE SUPPORTS

RISE, B (FT)	R_1 (KIPS)	R_2 (KIPS)	R_3 (KIPS)	R_4 (KIPS)	R_5 (KIPS)	R_6 (KIPS)	DRIVE WEIGHT,W (KIPS)
80+	26	28	42	32	32	46	INTERNAL
85	27	29	44	33	32	48	INTERNAL
90	29	31	46	34	33	50	INTERNAL
95	30	32	48	35	35	53	INTERNAL
100	31	34	50	37	36	55	INTERNAL

FIG. 5
SEE NOTE 4

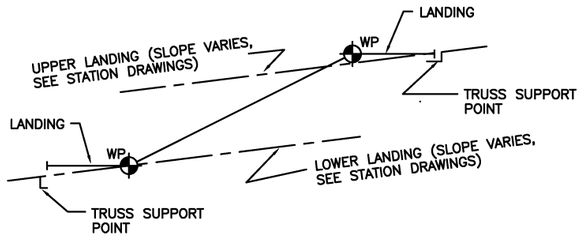

FIG. 6
SEE NOTE 3

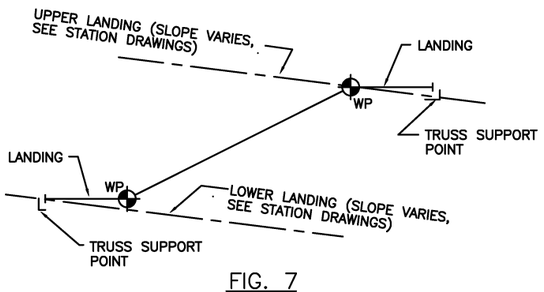

FIG. 7
SEE NOTE 3

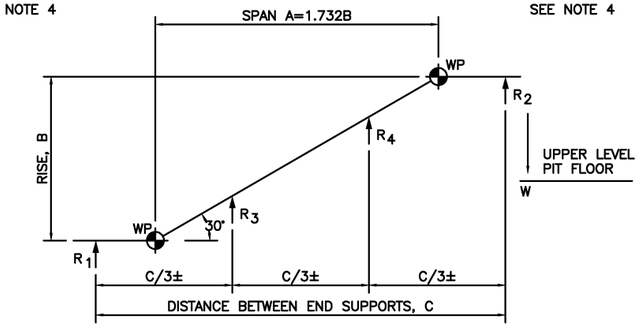

TWO END SUPPORTS, TWO INTERMEDIATE SUPPORTS

RISE, B (FT)	R_1 (KIPS)	R_2 (KIPS)	R_3 (KIPS)	R_4 (KIPS)	DRIVE WEIGHT,W (KIPS)
40+	22	24	29	29	INTERNAL
45	24	26	31	31	INTERNAL
50	26	28	34	34	INTERNAL
50+	27	29	42	44	INTERNAL
55	28	31	44	47	INTERNAL
60	30	34	48	49	INTERNAL

FIG. 3
SEE NOTE 4

NOTES:

1. LINEAR INTERPOLATION MAY BE USED FOR RISES NOT GIVEN.
2. SYMBOLS AND ABBREVIATIONS
   WP= ESCALATOR WORKING POINT
   KIPS= UNITS OF WEIGHT, 1,000 LB
3. FIGURE 6 AND FIGURE 7 SHOW THE METHOD OF WORKING POINT PLACEMENT ON THE STATION CONTRACT DRAWINGS WHEN A DESIGNED SLOPE IS TO BE USED AT MEZZANINE, TRAIN PLATFORM OR OTHER SURFACE. THE FINISHED FLOOR SHALL BE WARPED AWAY FROM THE LANDING PLATES TO PREVENT DRAINAGE INTO THE PITS.
4. ESCALATOR INSTALLER MUST REFER TO STATION DESIGN INSTALLER DRAWINGS FOR SPECIFIC SUPPORT DESIGN DETAILS.

1. EXPLANATION OF ESCALATOR NUMBERING SYSTEM

00.0.000.0.0
COMPLETE ESCALATOR NUMBER

00.0. STATION — 000.0.0 ESCALATOR NUMBER IN STATION

00 · 0 · 0 0 0 · 0 · 0

- 00 — STRUCTURAL CONTRACT SECTION
- 0 — NUMBER OF STATION IN CONTRACT SECTION *
- 0 — ENTRANCE NUMBER
- 0 — SERVICE LOCATION (SEE No.2 BELOW)
- 0 — CLASS OF WELLWAY STRUCTURE
- 0 — SINGLE ESCALATOR NUMBER (OR "F" FOR FUTURE AS REQ'D)
- 0 — TOTAL ESCALATORS IN WELLWAY

00.0.000 .0.0
WELLWAY NUMBER

* MAY BE EITHER TWO OR THREE ALPHANUMERIC CHARACTERS

2. EXPLANATION OF SERVICE LOCATION DESIGNATIONS

- D= STREET ENTRANCE TO INTERMEDIATE LANDING ABOVE MEZZANINE.
- E= FROM INTERMEDIATE LANDING TO MEZZANNINE PROPER.
- F= ESCALATOR DESIGNATION FOR FUTURE INSTALLATION (USED IN PLACE OF SINGLE ESCALATOR NUMBER).
- G= INTERIOR BUILDING ENTRANCE.
- P= MEZZANINE TO TRAIN PLATFORM.
- R= ABOVE GROUND STATION.
- S= STREET ENTRANCE DIRECT TO MEZZANINE.

NOTE: FOR ADDITIONAL DETAILS REFER TO DD–A–ESC–001 THROUGH DD–A–ESC–011, DD–M–063 THROUGH DD–M–067, DD–M–079 & DD–M–080.

DESIGNED ____ DATE
DRAWN ____ DATE
CHECKED ____ DATE
APPROVED ____ DATE

REFERENCE DRAWINGS

NUMBER	DESCRIPTION

REVISIONS

DATE	BY	DESCRIPTION
08/2001	SYSP	Revised and issued by the Authority

WASHINGTON METROPOLITAN AREA TRANSIT AUTHORITY

DEPARTMENT OF TRANSIT SYSTEM DEVELOPMENT
OFFICE OF SYSTEMS

SUBMITTED ____ DATE

APPROVED ____ DIRECTOR May 3, 2001 DATE

ESCALATOR
LOADS AND DETAILS

SCALE NONE

DRAWING NO. ST–ESC–006

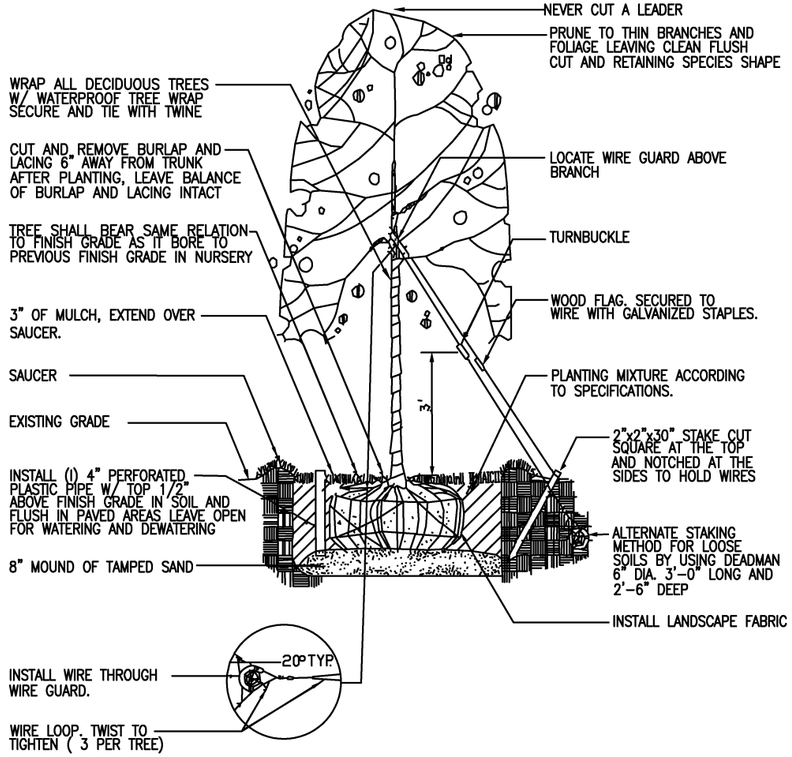

1 TREE PLANTING - GUYING

SCALE: 1/2" = 1'-0" 0 1' 2' 4'

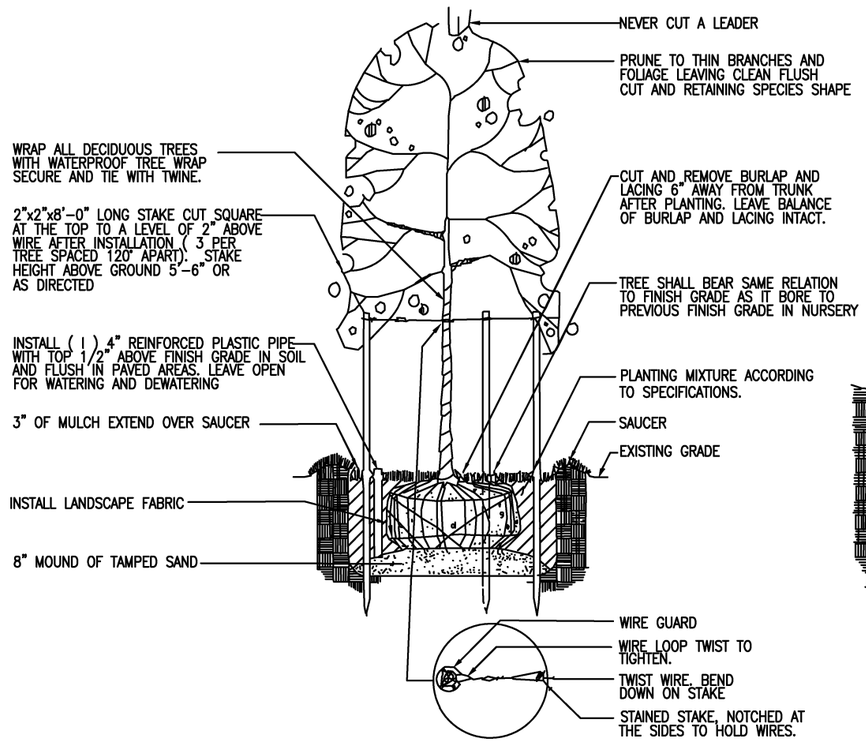

2 TREE PLANTING - STAKING

SCALE: 1/2" = 1'-0" 0 1' 2' 4'

NOTE: WHEN GUYING TREES ON SLOPES PLACE TWO STAKES ON UPHILL SIDE AND ONE ON DOWNHILL SIDE.

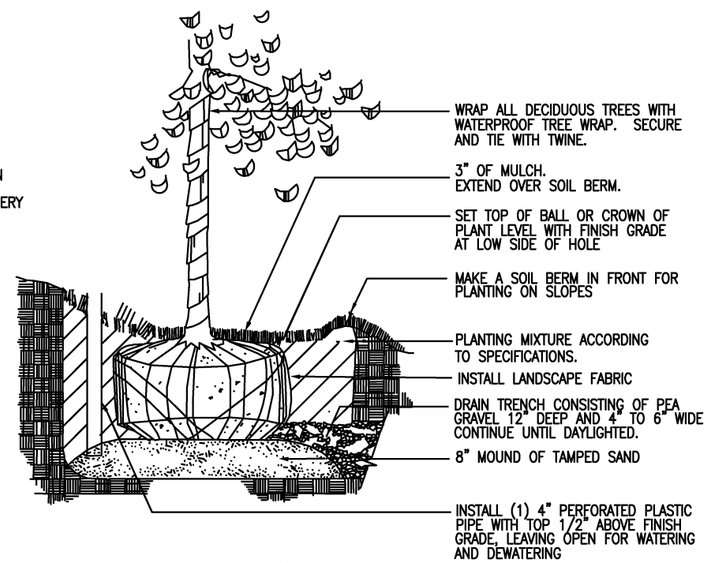

3 TREE PLANTING - SLOPES > 3:1

SCALE: 3/4" = 1'-0" 0 6" 1' 2'

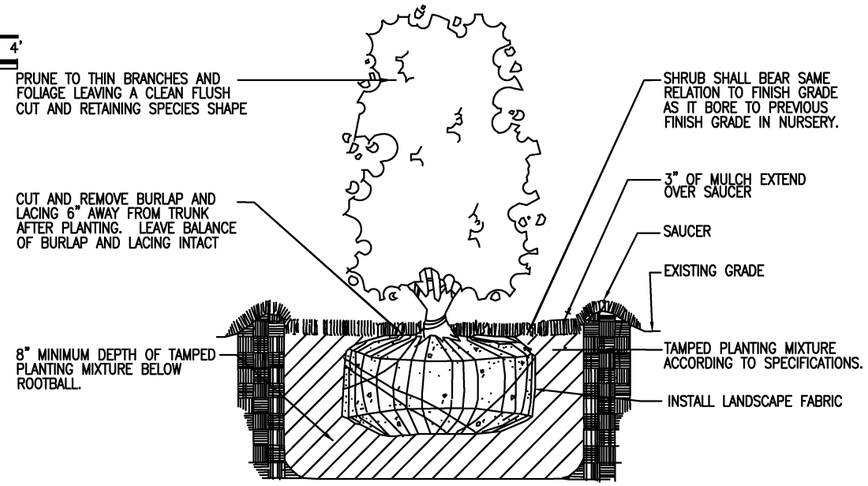

4 SHRUB PLANTING - BALLED AND BURLAPPED

SCALE: 1" = 1'-0" 0 6" 1' 2'

DESIGNED	D. MUNSON	1998 DATE
DRAWN	W. SCOTT	1998 DATE
CHECKED	K. LANDESZ	1998 DATE
APPROVED	J. CORLEY	1998 DATE

REFERENCE DRAWINGS

NUMBER	DESCRIPTION

REVISIONS

DATE	BY	DESCRIPTION
08/2001	ENGA	Revised and issued by the Authority

WASHINGTON METROPOLITAN AREA TRANSIT AUTHORITY

DEPARTMENT OF TRANSIT SYSTEM DEVELOPMENT
OFFICE OF ENGINEERING AND ARCHITECTURE

SUBMITTED _____ DATE

APPROVED _____ DIRECTOR May 3, 2001 DATE

LANDSCAPE STANDARD DRAWING
TREE AND SHRUB PLANTING

SCALE	DRAWING NO.
AS SHOWN	ST-LA-001

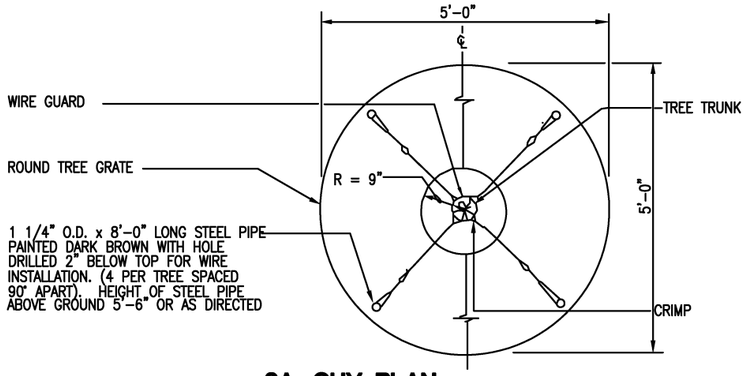

2A. GUY PLAN

SCALE: 3/4" = 1'-0"

0 6" 1' 2'

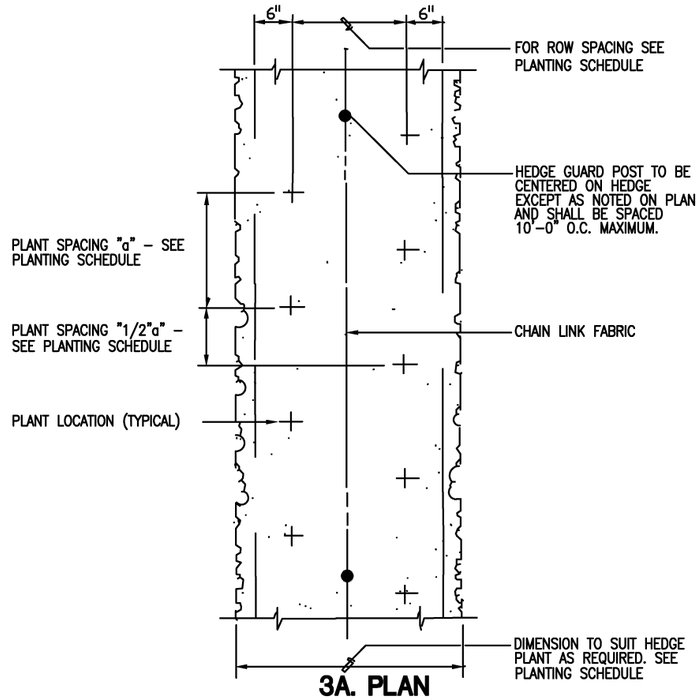

3A. PLAN

SCALE: 1/2" = 1'-0"

0 1' 2' 4'

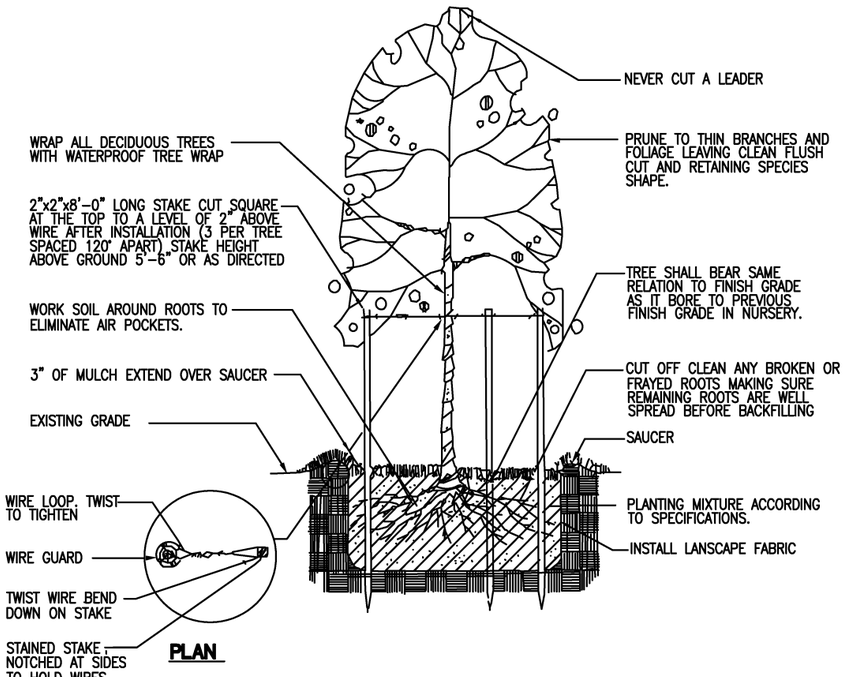

PLAN

1 TREE PLANTING - BARE ROOT DECIDUOUS

SCALE: 1/2" = 1'-0"

0 1' 2' 4'

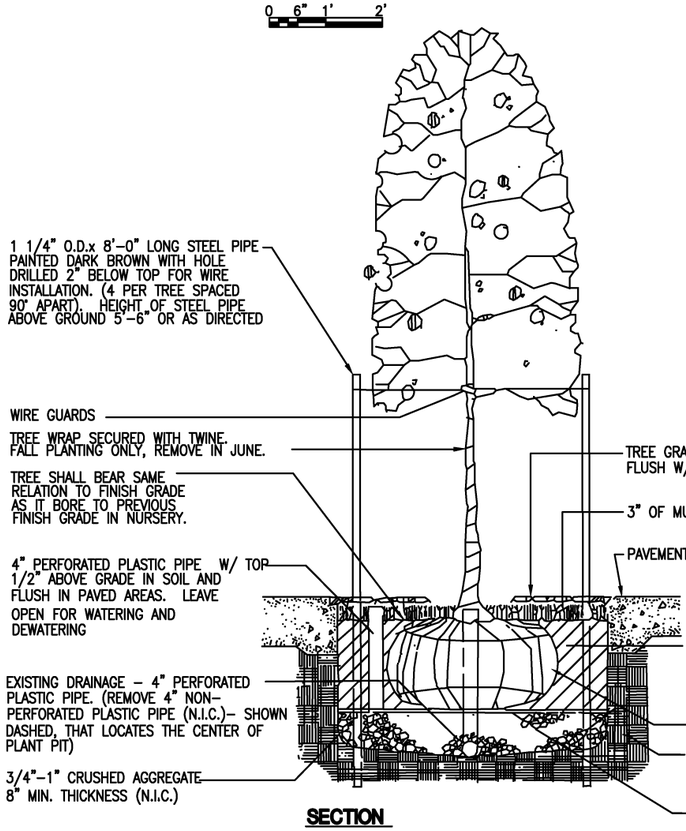

SECTION

2 TREE PLANTING - IN PAVED AREA

SCALE: 3/4' = 1'-0"

0 6" 1' 2'

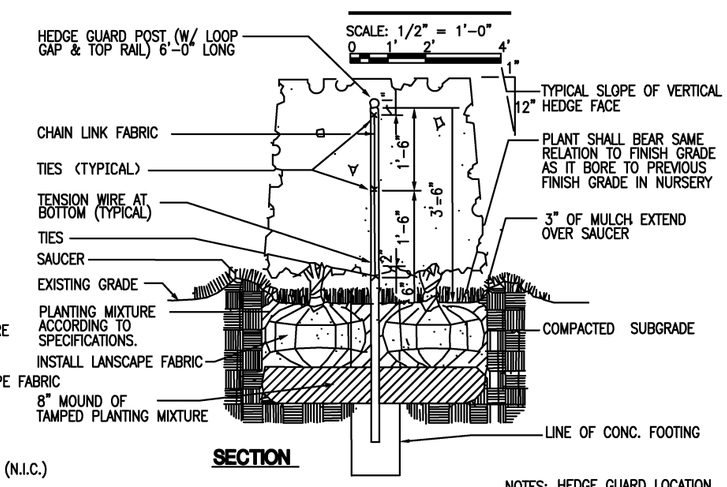

SECTION

3 HEDGE PLANTING - WITH GUARD

SCALE: 3/4' = 1'-0"

0 6" 1' 2'

NOTES: HEDGE GUARD LOCATION PER LANDSCAPING PLAN.

TOPRAIL TO BE PART OF ALL HEDGE GUARD INSTALLED.

DESIGNED	D. MUNSON	1998 DATE
DRAWN	W. SCOTT	1998 DATE
CHECKED	K. LANDESZ	1998 DATE
APPROVED	J. CORLEY	1998 DATE

REFERENCE DRAWINGS

NUMBER	DESCRIPTION

REVISIONS

DATE	BY	DESCRIPTION
08/2001	ENGA	Revised and issued by the Authority

WASHINGTON METROPOLITAN AREA TRANSIT AUTHORITY

DEPARTMENT OF TRANSIT SYSTEM DEVELOPMENT
OFFICE OF ENGINEERING AND ARCHITECTURE

SUBMITTED _____ DATE

APPROVED _____ DIRECTOR May 3, 2001 DATE

LANDSCAPE STANDARD DRAWING
TREE AND HEDGE PLANTING

SCALE	DRAWING NO.
AS SHOWN	ST-LA-002

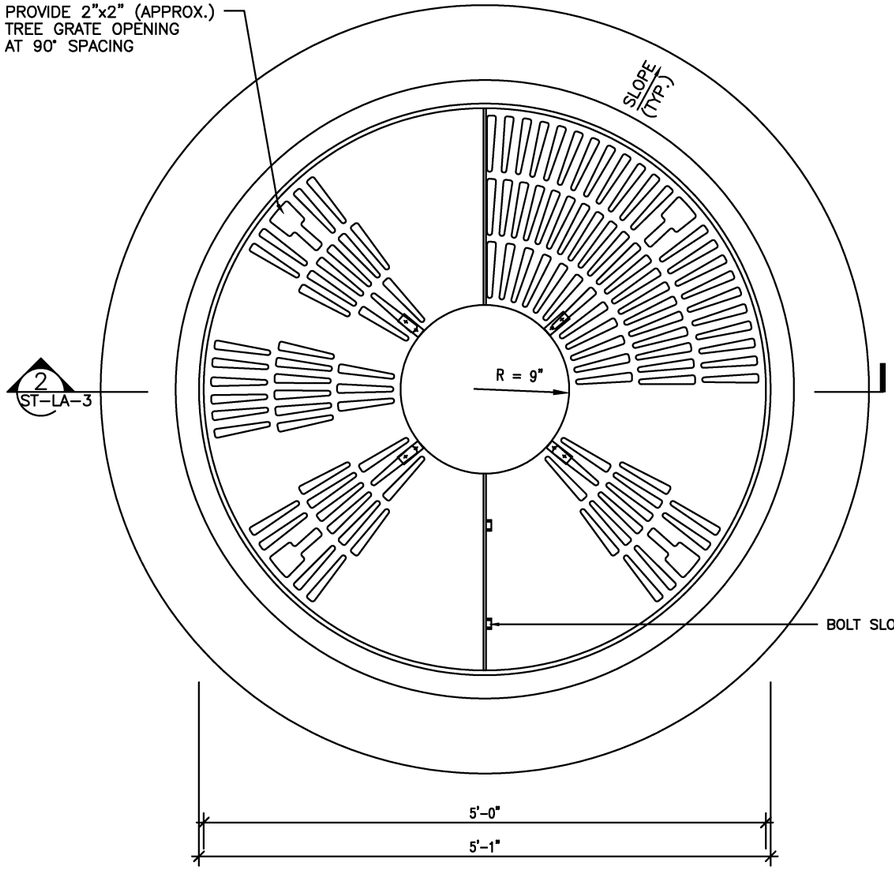

1 PLAN - TREE GRATE

1 1/2" = 1'-0"

0 6" 1' 2'

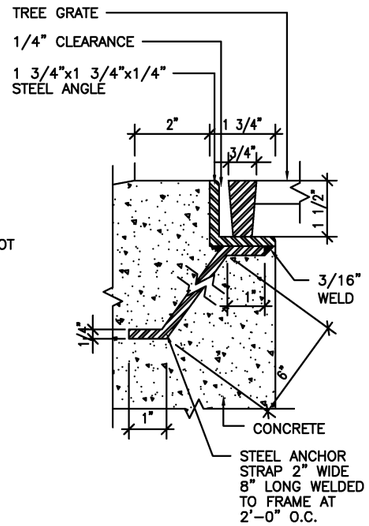

2a DETAIL - TREE GRATE FRAME

1/2" = 1'-0"

0 1' 2' 4'

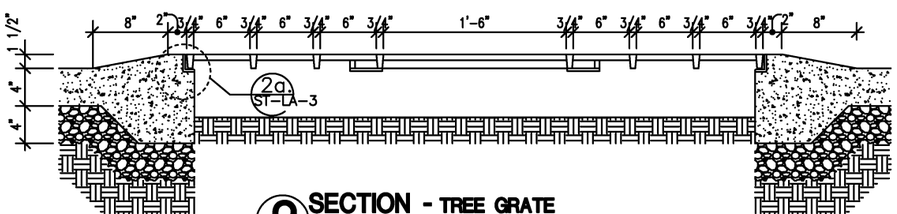

2 SECTION - TREE GRATE

1 1/2" = 1'-0"

0 6" 1' 2'

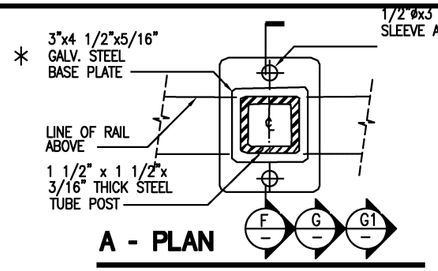

A - PLAN

SCALE: 1/2" =1'-0"

0 1' 2' 4'

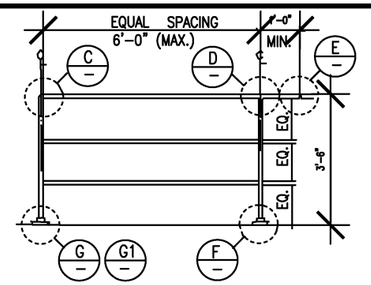

B - TYPICAL BARRIER ELEVATION

1/2" = 1'-0"

0 1' 2' 4'

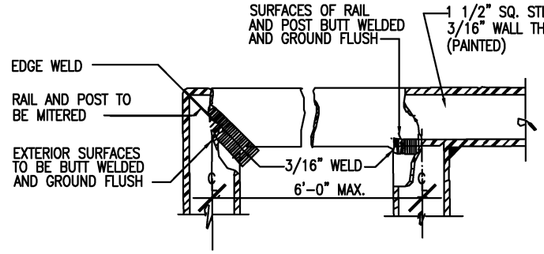

C - END CONDITION

1/2" = 1'-0"

0 1' 2' 4'

D - INTERMEDIATE JOINT

1/2" = 1'-0"

0 1' 2' 4'

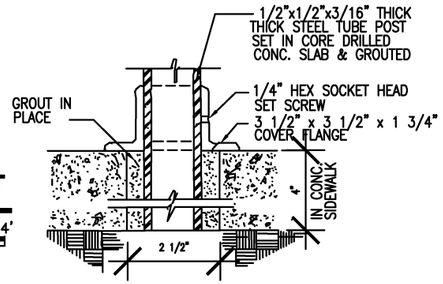

F - SECTION @ CONC. SIDEWALK

6" = 1'-0"

0 1" 2" 4"

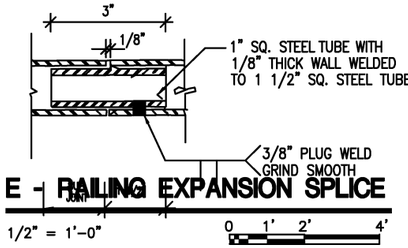

E - RAILING EXPANSION SPLICE

1/2" = 1'-0"

0 1' 2' 4'

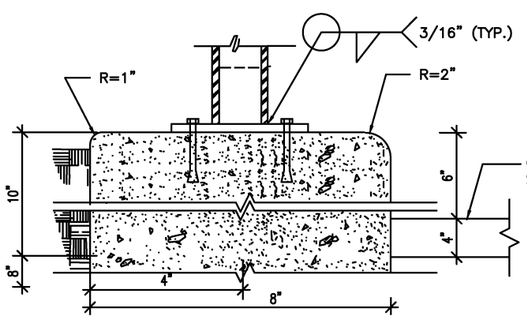

G - SECTION @ LAWN & CURB

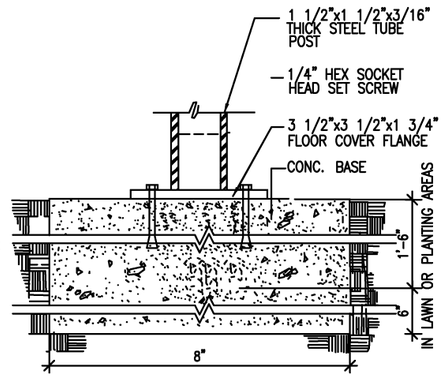

G1 - SECTION @ LAWN & PLANTING AREAS

3 DETAIL - PEDESTRIAN BARRIER

6" = 1'-0"

0 1' 2' 4'

DESIGNED	D. MUNSON	1998	DATE
DRAWN	W. SCOTT	1998	DATE
CHECKED	K. LANDESZ	1998	DATE
APPROVED	J. CORLEY	1998	DATE

REFERENCE DRAWINGS

NUMBER	DESCRIPTION

REVISIONS

DATE	BY	DESCRIPTION
08/2001	ENGA	Revised and issued by the Authority

WASHINGTON METROPOLITAN AREA TRANSIT AUTHORITY

DEPARTMENT OF TRANSIT SYSTEM DEVELOPMENT
OFFICE OF ENGINEERING AND ARCHITECTURE

SUBMITTED _____ DATE

APPROVED _____ DIRECTOR May 3, 2001 DATE

LANDSCAPE STANDARD DRAWING
ROUND CAST IRON TREE GRATE
PEDESTIAN BARRIER

SCALE: AS SHOWN

DRAWING NO.: ST-LA-003

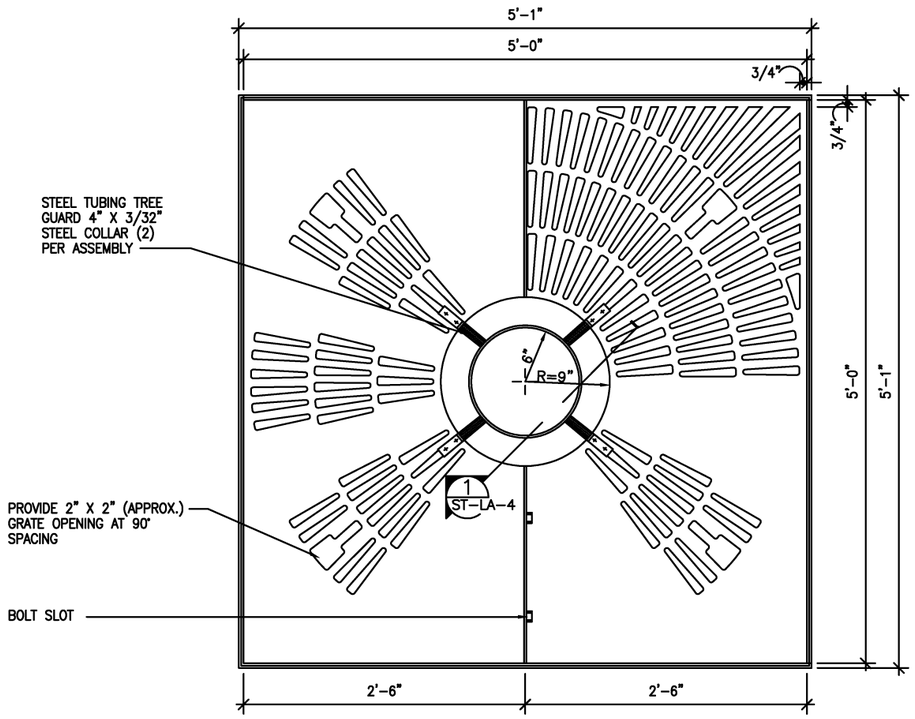

PLAN

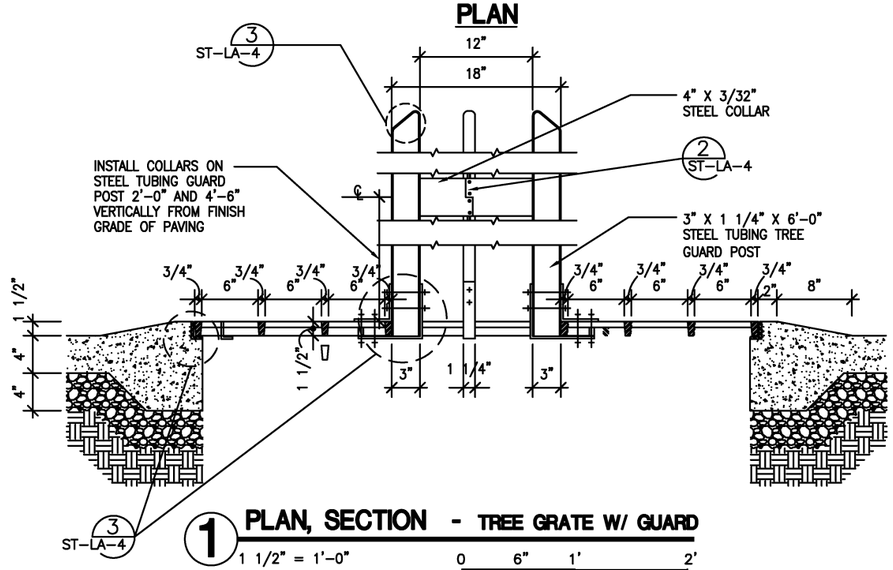

1 PLAN, SECTION - TREE GRATE W/ GUARD

1 1/2" = 1'-0"

0 6" 1' 2'

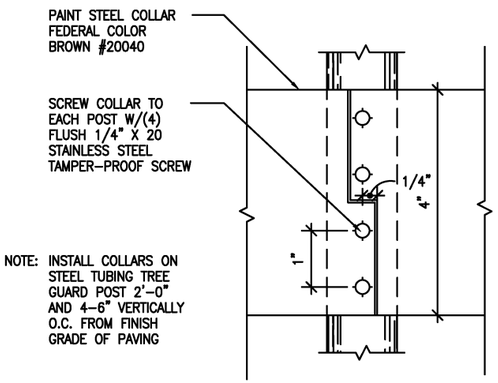

2 ELEVATION - COLLAR MOUNTING

NOT TO SCALE

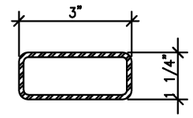

PLAN

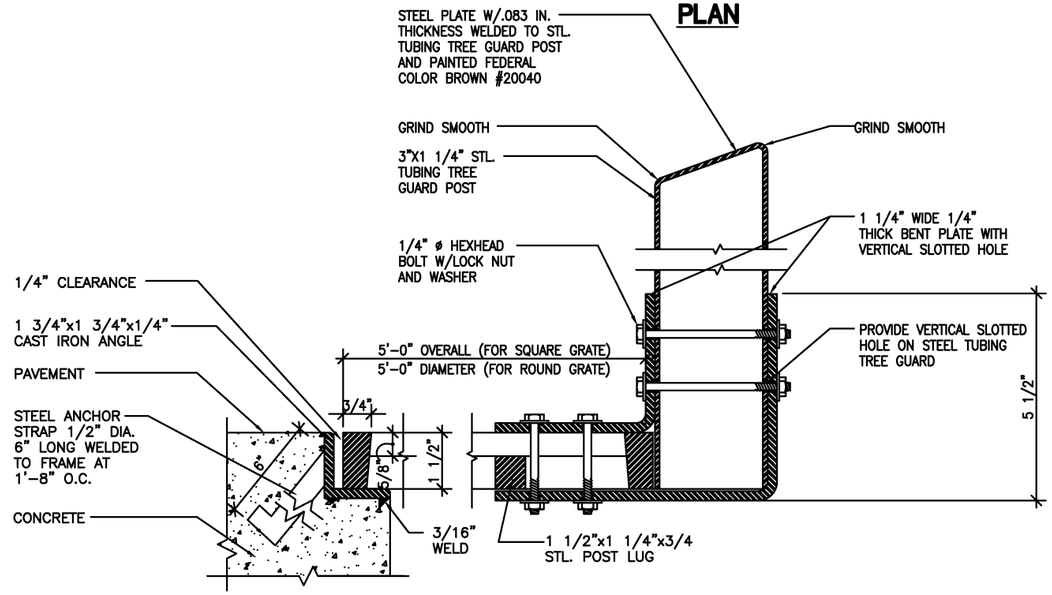

3 SECTION - TREE GUARD POST MOUNTING

6" = 1'-0"

0 1 1/2" 3" 6"

DESIGNED	D. MUNSON	1998 DATE
DRAWN	W. SCOTT	1998 DATE
CHECKED	K. LANDESZ	1998 DATE
APPROVED	J. CORLEY	1998 DATE

REFERENCE DRAWINGS

NUMBER	DESCRIPTION

REVISIONS

DATE	BY	DESCRIPTION
08/2001	ENGA	Revised and issued by the Authority

WASHINGTON METROPOLITAN AREA TRANSIT AUTHORITY

DEPARTMENT OF TRANSIT SYSTEM DEVELOPMENT
OFFICE OF ENGINEERING AND ARCHITECTURE

SUBMITTED _____ DATE

APPROVED _____ DIRECTOR May 3, 2001 DATE

LANDSCAPE STANDARD DRAWING
SQUARE CAST IRON TREE GRATE AND GUARD

SCALE: AS SHOWN

DRAWING NO.: ST-LA-004